FRONT AXLE, STAY ROD AND FRONT AXLE WEIGHTS (PART 1)

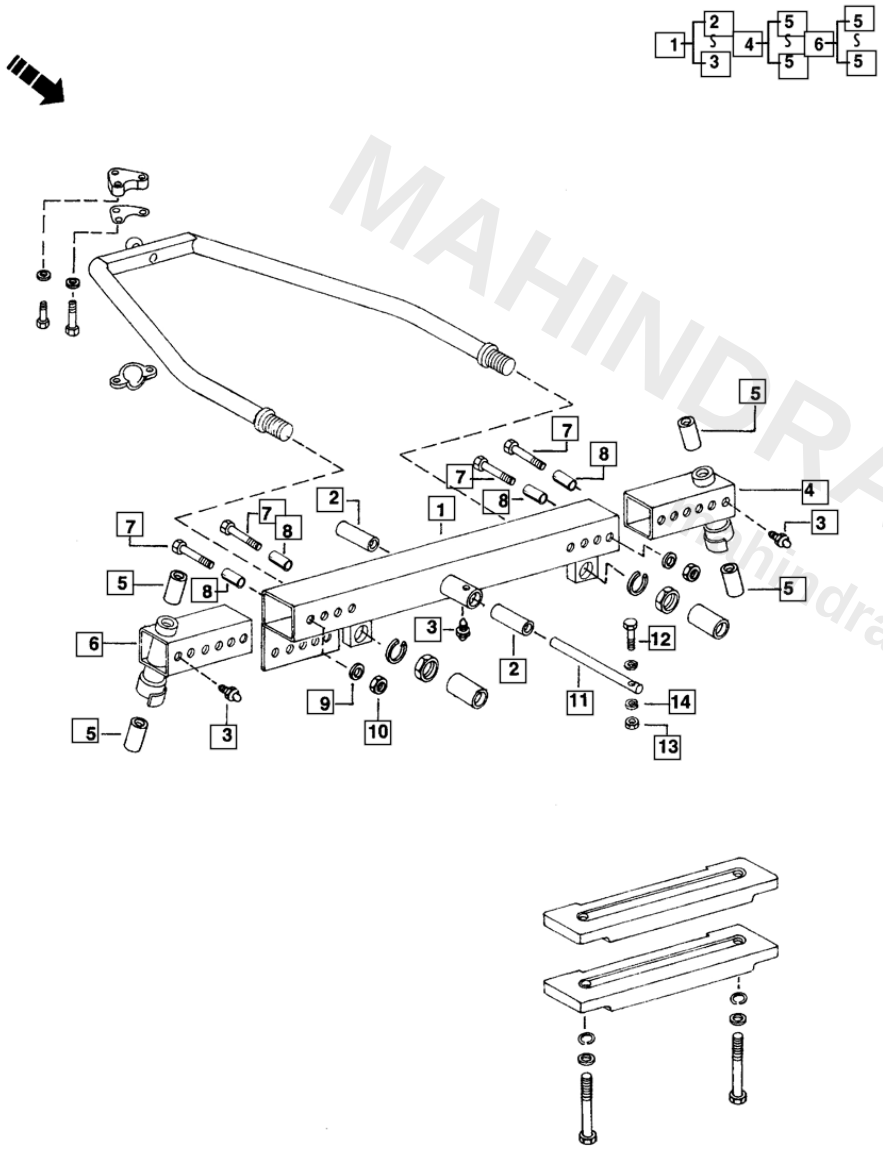

REF NO.	PART #	DESCRIPTION	PRICE	QTY NEEDED	SELECT QTY	ADD TO CART
1	005553715R92	AXLE Front Cpte (Cent...	—	1		NOT AVAILABLE
2	000705593R1	BUSH Front Axle Pivot...	$7.51	2	2	ADD TO CART
2	001231711R1	BUSH Front Axle Pivot...	—	2		NOT AVAILABLE
2	001233128R1	BUSH Pivot Pin (B-275)	—	2		NOT AVAILABLE
2	005553988R1	FRONT Axle Bush	$5.70	2	2	ADD TO CART
3	000109461	NIPPLE GREASE 1/8...	$7.36	3	3	ADD TO CART
4	005557322R91	EXTENSION F.A. LH C...	$329.99	1	1	ADD TO CART
5	000040090D	BUSHING Steering	—	2		NOT AVAILABLE
5	001231714R1	BUSH STRG KNUCKLE	—	2		NOT AVAILABLE
5	001233127R1	BUSH Steering Knuckl...	—	2		NOT AVAILABLE
5	005554360R1	BUSH Steering Knuckle	$27.60	2	2	ADD TO CART

MAHINDRA DIRECT PARTS
mahindradirectparts.com

FRONT AXLE, STAY ROD AND FRONT AXLE WEIGHTS (PART 1)

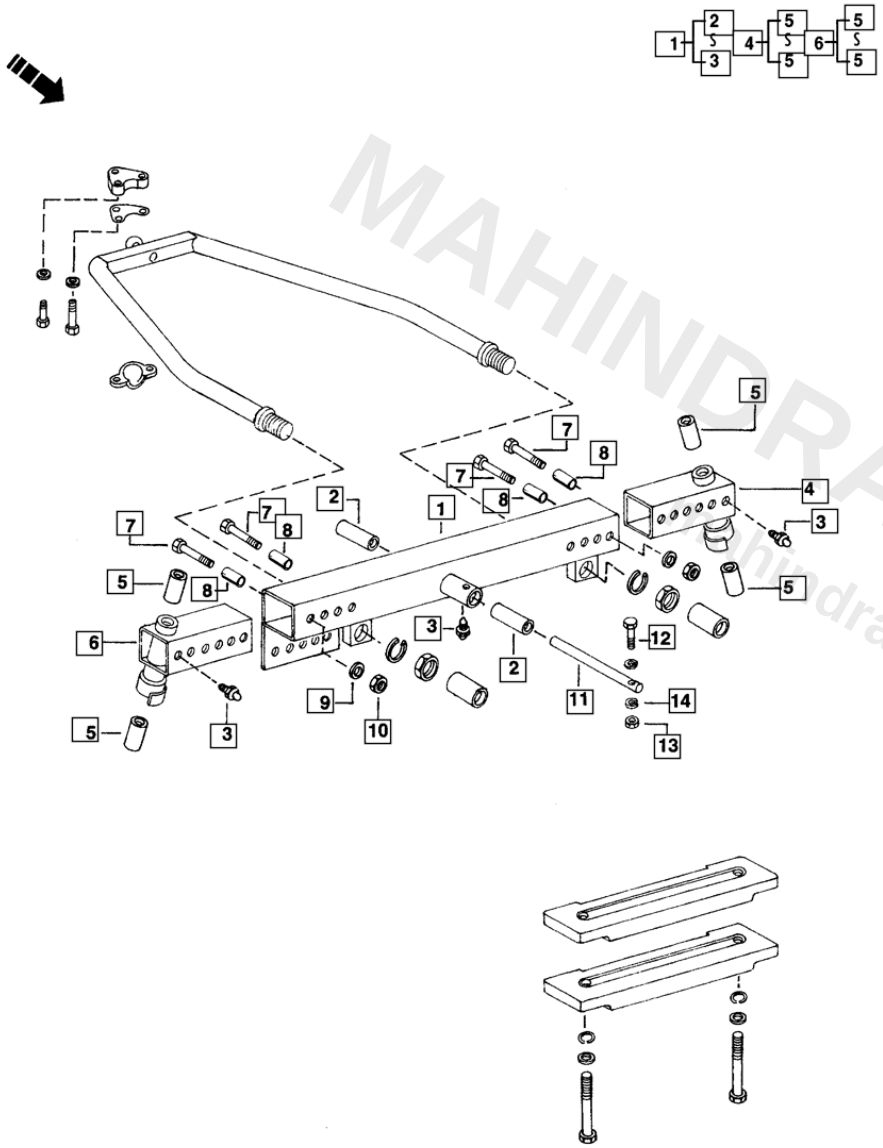

REF NO.	PART #	DESCRIPTION	PRICE	QTY NEEDED	SELECT QTY	ADD TO CART
6	005557323R91	EXTENSION F.A. RH...	$329.99	1	1	ADD TO CART
5	005554360R2	BUSH Stg. Knuckle Pvt...	$27.60	2	2	ADD TO CART
7	001081755R1	BOLT Front Axle	$25.76	4	4	ADD TO CART
8	005556110R1	SLEEVE Front Axle Bolt	$9.20	4	4	ADD TO CART
9	001082016R2	WASHER Spring Lock...	—	4		NOT AVAILABLE
10	000220081	NUT HEX 3/4	$1.25	4	4	ADD TO CART
11	001231776R1	PIN PIVOT	—	1		NOT AVAILABLE
12	000179851	BOLT Hex Head 3/8" U...	$1.84	1	1	ADD TO CART
13	000102635	NUT 3/8' Unc Hex	$0.45	1	1	ADD TO CART
14	001082012R2	WASHER 3/8" Spring L...	$0.49	1	1	ADD TO CART

MAHINDRA DIRECT PARTS
mahindradirectparts.com

FRONT AXLE, STAY ROD AND FRONT AXLE WEIGHTS (PART 2)

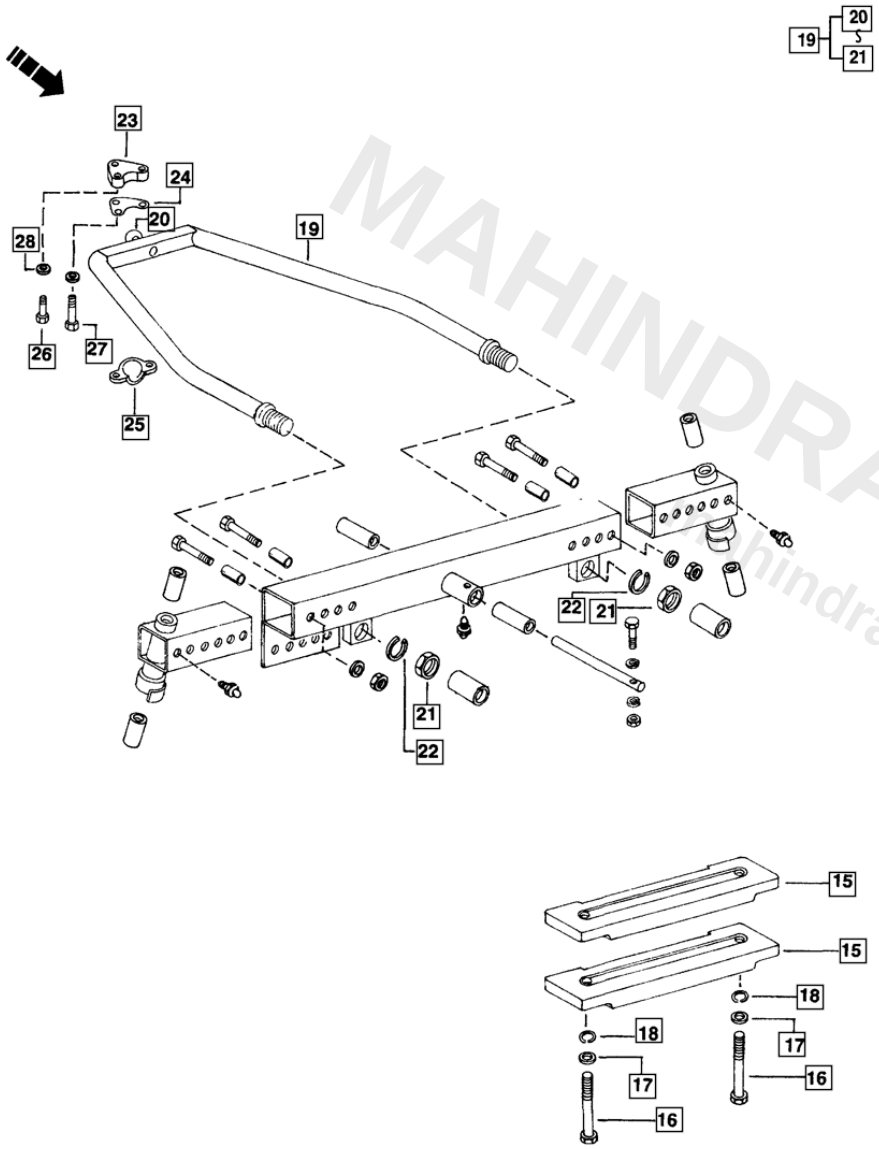

REF NO.	PART #	DESCRIPTION	PRICE	QTY NEEDED	SELECT QTY	ADD TO CART
15	001231777R1	WEIGHT Frt Below Fro...	—	2		NOT AVAILABLE
16	000187152	BOLT Hex HD G 12.7m...	—	2		NOT AVAILABLE
17	000120396	WASHER Plain 0.531 x...	$0.49	2	2	ADD TO CART
18	001082014R2	WASHER Spring Lock...	$0.30	2	2	ADD TO CART
19	005550991R95	ROD Stay With Lock N...	$369.84	1	1	ADD TO CART
20	003071538R1	BALL Stay Rod	$20.24	1	1	ADD TO CART
21	007600057R1	NUT 1-3/8" UNF Hex.	—	2		NOT AVAILABLE
22	001231305R2	WASHER 36 mm Sprin...	$1.10	2	2	ADD TO CART
23	001127597R3	SOCKET Ball Stay Rod	—	1		NOT AVAILABLE

MAHINDRA DIRECT PARTS
mahindradirectparts.com

FRONT AXLE, STAY ROD AND FRONT AXLE WEIGHTS (PART 2)

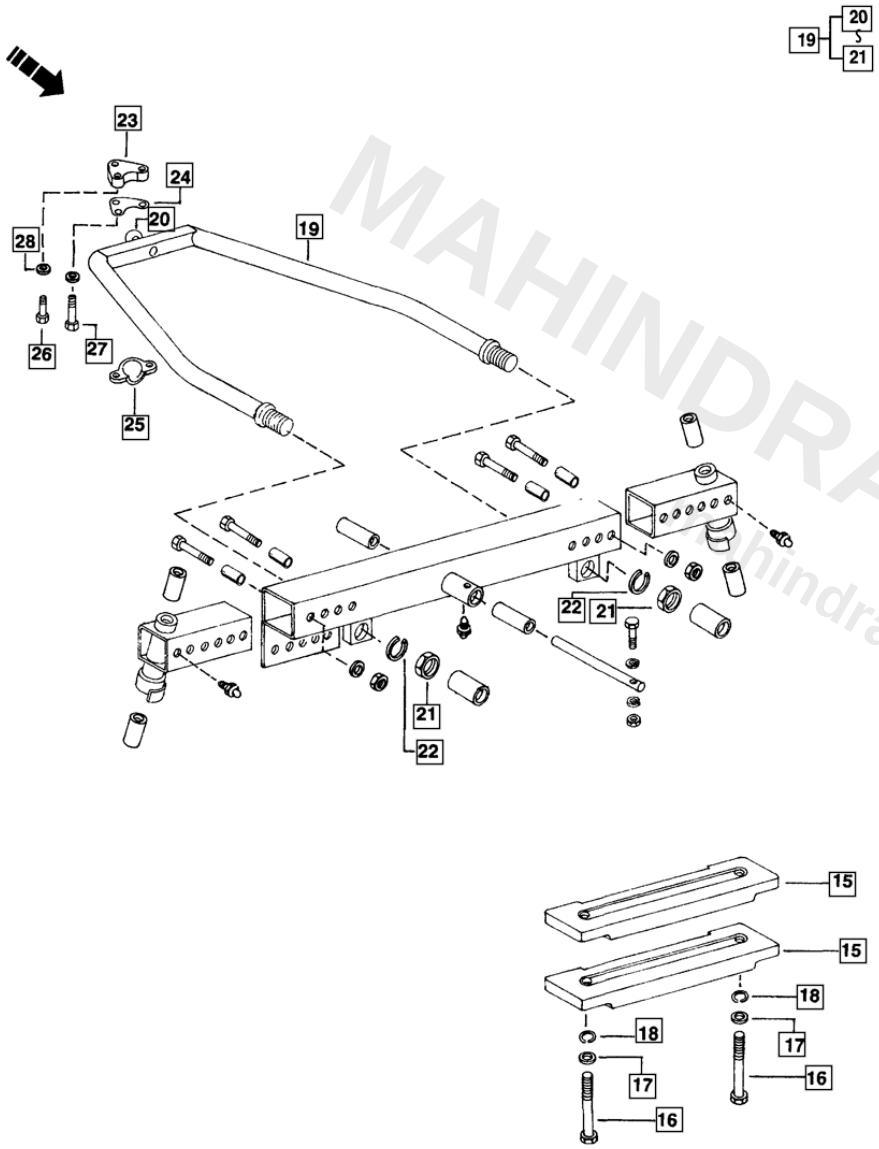

REF NO.	PART #	DESCRIPTION	PRICE	QTY NEEDED	SELECT QTY	ADD TO CART
23	003043920R3	SOCKET Stay Rod Ball	—	1		NOT AVAILABLE
24	000842389R1	SHIM Stay Rod G 0.38...	$0.30	2	2	ADD TO CART
24	001231671R1	SHIM Stay Rod 0.030"	—	2		NOT AVAILABLE
24	001099672R2	SPACER Stay Rod 0.0...	$0.75	1	1	ADD TO CART
24	001099673R2	SPACER Stay Rod 0.1...	—	1		NOT AVAILABLE
25	003109613R1	CAP Stay Rod Ball Soc...	$25.76	1	1	ADD TO CART
26	000271558	BOLT Hex Head 5/8" U...	$1.84	2	2	ADD TO CART
27	000271565	BOLT Hex Head 5/8" U...	$2.15	1	1	ADD TO CART
28	001233150R1	WASHER 5/8" Spring L...	$0.30	3	3	ADD TO CART

MAHINDRA DIRECT PARTS
mahindradirectparts.com

FRONT AXLE SUPPORT

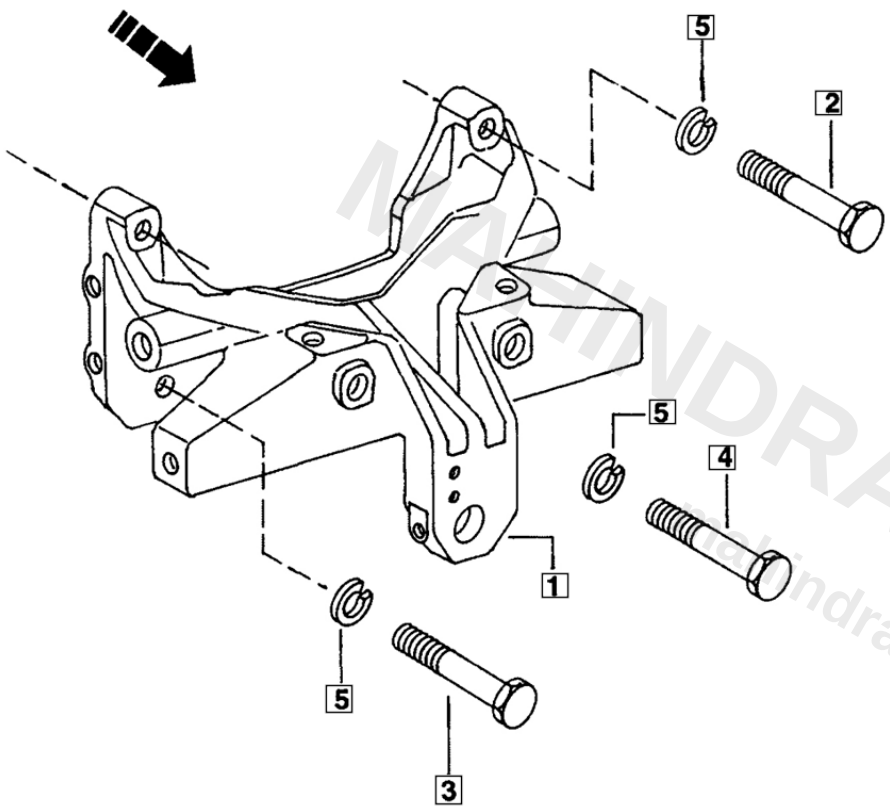

REF NO.	PART #	DESCRIPTION	PRICE	QTY NEEDED	SELECT QTY	ADD TO CART
1	001127888R7	SUPPORT Front Axle F...	—	1		NOT AVAILABLE
2	000271566	BOLT 5/8" UNC x 3" Hex.	$2.43	2	2	ADD TO CART
3	000271569	BOLT 5/8" UNC x 3-3/4...	$12.88	1	1	ADD TO CART
4	000271565	BOLT Hex Head 5/8" U...	$2.15	1	1	ADD TO CART
5	001082015R2	WASHER 5/8'· Spring Lock	$0.65	4	4	ADD TO CART

MAHINDRA DIRECT PARTS
mahindradirectparts.com

FRONT WHEEL HUB ASSEMBLY (PART 1)

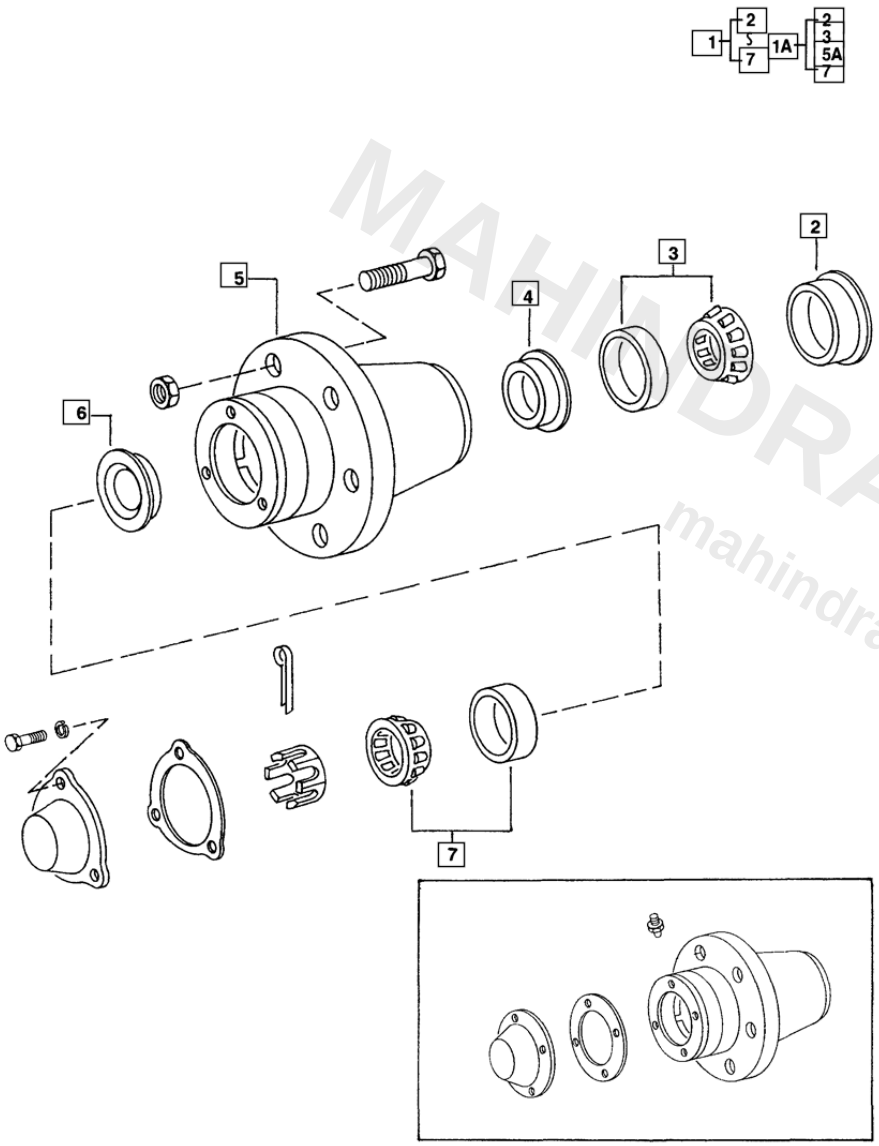

REF NO.	PART #	DESCRIPTION	PRICE	QTY NEEDED	SELECT QTY	ADD TO CART
1	003043868R11	HUB Front Wheel (Bare)	—	2		NOT AVAILABLE
2	000048548D	RETAINER Felt Washe...	$1.84	2	2	ADD TO CART
3	000371896R91	BEARING Front Wheel...	—	2		NOT AVAILABLE
3	001082166R91	BEARING FRONT WH...	—	2		NOT AVAILABLE
3	000618022R91	BEARING Front Wheel...	—	2		NOT AVAILABLE
3	001099226R91	BEARING FRONT WH...	$37.33	2	2	ADD TO CART
4	003043869R1	RETAINER Grease - In...	$6.43	2	2	ADD TO CART

MAHINDRA DIRECT PARTS
mahindradirectparts.com

FRONT WHEEL HUB ASSEMBLY (PART 1)

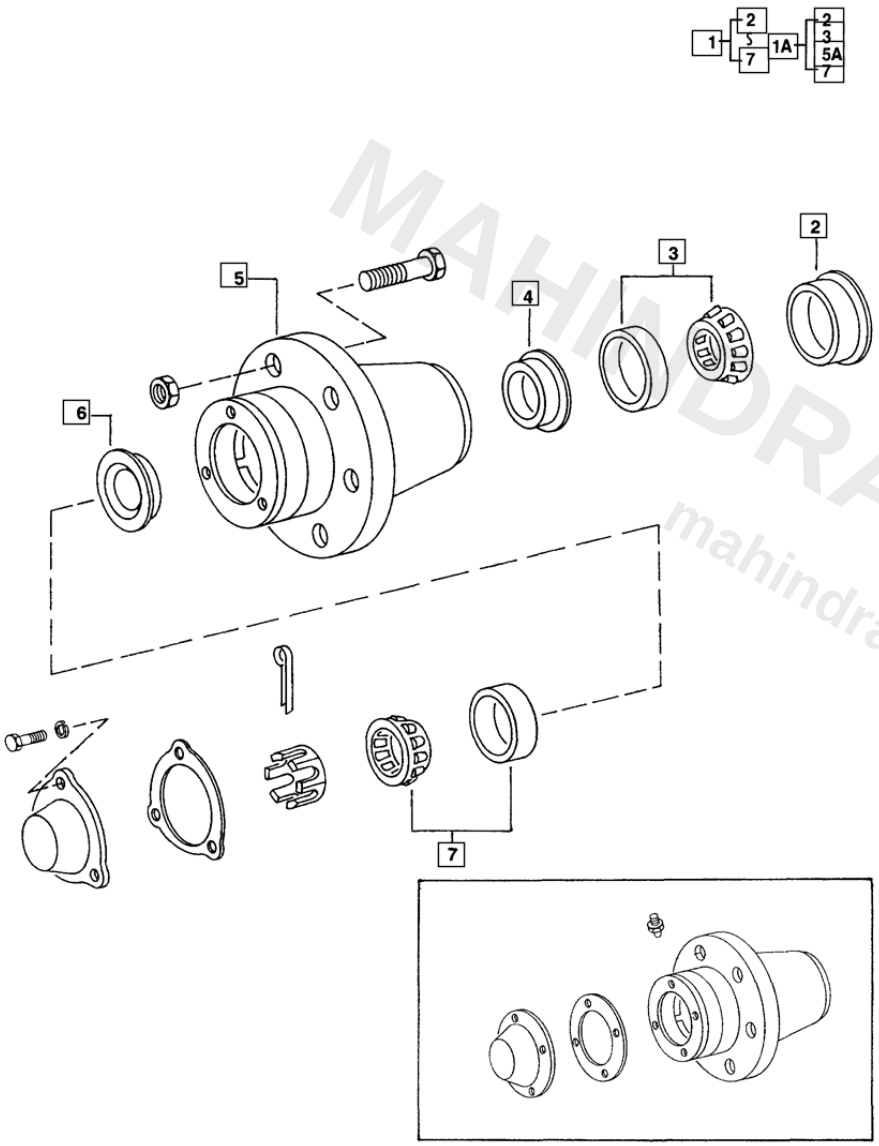

REF NO.	PART #	DESCRIPTION	PRICE	QTY NEEDED	SELECT QTY	ADD TO CART
5	003043868R1	HUB Front Wheel (Bare)	—	2		NOT AVAILABLE
6	003043870R1	RETAINER Grease Fro...	$6.85	2	2	ADD TO CART
7	000392674R91	BEARING Front WHL	—	2		NOT AVAILABLE
7	000700549R91	BEARING Front Wheel...	—	2		NOT AVAILABLE
7	005555170R91	BEARING Front Wheel...	—	2		NOT AVAILABLE
7	001099227R91	BEARING Front Wheel...	$38.62	2	2	ADD TO CART

MAHINDRA DIRECT PARTS
mahindradirectparts.com

FRONT WHEEL HUB ASSEMBLY (PART 2)

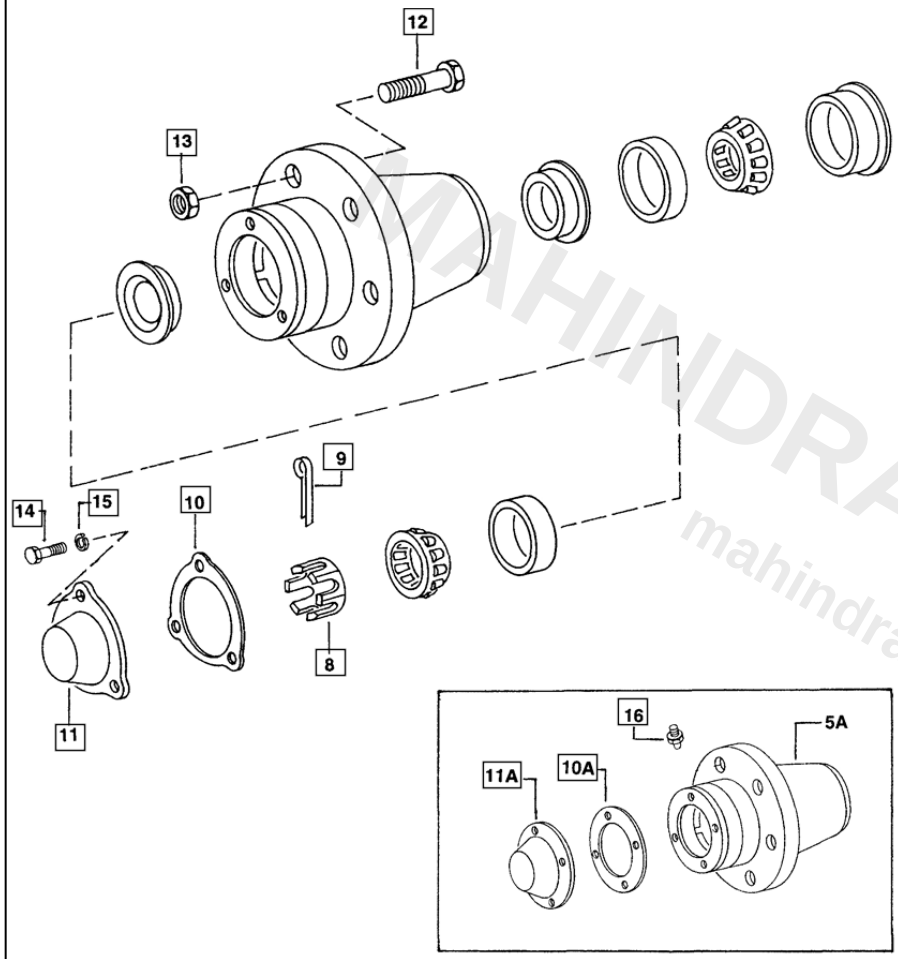

REF NO.	PART #	DESCRIPTION	PRICE	QTY NEEDED	SELECT QTY	ADD TO CART
8	000427645	NUT Slotted G 22.225...	$2.05	2	2	ADD TO CART
9	000103398	PIN Cotter 5/32" x 1-1/2"	$1.84	2	2	ADD TO CART
10	005555244R1	GASKET Frt Wheel Hu...	—	2		NOT AVAILABLE
11	005555219R1	CAP Front	—	2		NOT AVAILABLE
12	003047573R1	BOLT Front Wheel Hub	$3.68	12	12	ADD TO CART
13	003047574R1	NUT Front Wheel Hub...	$2.61	12	12	ADD TO CART
14	000179816	BOLT Hex. Head 5/16...	$0.30	6	6	ADD TO CART
15	001082011R2	WASHER Spring Lock...	$0.10	6	6	ADD TO CART
16	000109461	NIPPLE GREASE 1/8...	$7.36	1	1	ADD TO CART

MAHINDRA DIRECT PARTS
mahindradirectparts.com