CENTRAL HOUSING

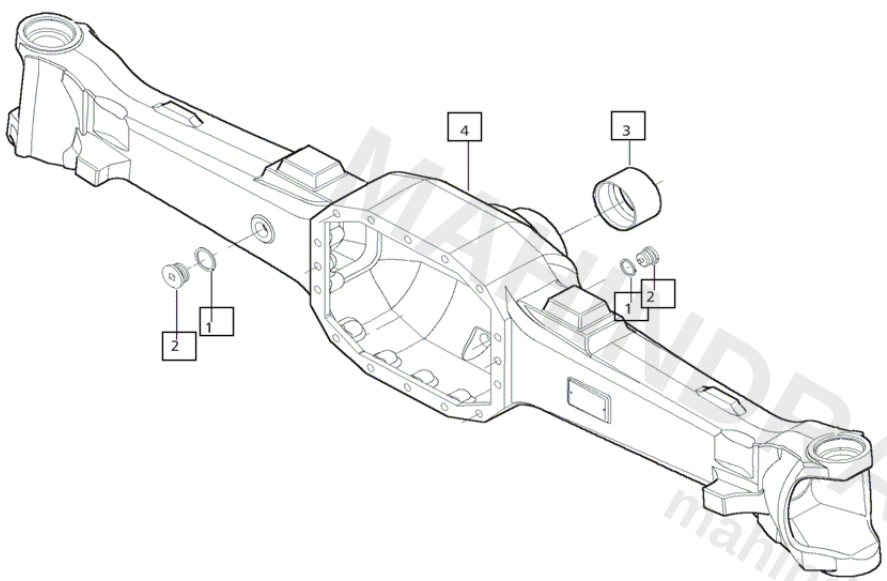

REF NO.	PART #	DESCRIPTION	PRICE	QTY NEEDED	SELECT QTY	ADD TO CART
1	006506098C1	SEAL Washer	$3.68	2	2	ADD TO CART
2	006506099C1	PLUG	$12.88	2	2	ADD TO CART
3	006506100C1	BUSHING	$176.64	1	1	ADD TO CART
4	006506101C1	STEERING Axle H...	$3,285.04	1	1	ADD TO CART
*	E006505455C91	FRONT Axle Compl...	—	1		NOT AVAILABLE

MAHINDRA DIRECT PARTS
mahindradirectparts.com

DIFFERENTIAL (PART 1)

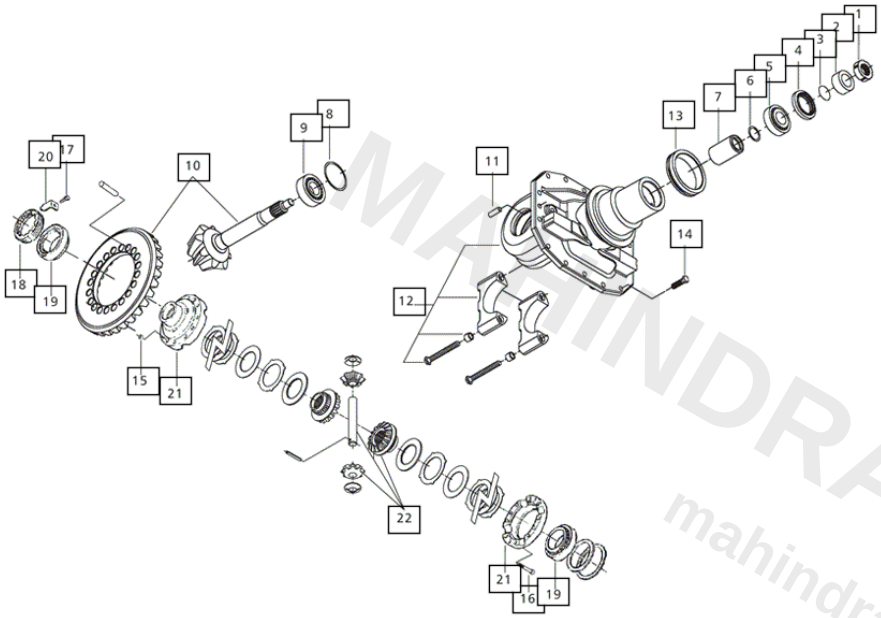

REF NO.	PART #	DESCRIPTION	PRICE	QTY NEEDED	SELECT QTY	ADD TO CART
1	006506102C1	NUT	$11.50	1	1	ADD TO CART
2	006506103C1	spacer	$15.64	1	1	ADD TO CART
3	006506104C1	O-RING	$1.70	1	1	ADD TO CART
4	006506105C1	seal	$13.34	1	1	ADD TO CART
5	006506106C1	BEARING	$56.58	1	1	ADD TO CART
6	006506107C1	shim	$0.45	1	1	ADD TO CART
6	006506108C1	SHIM	$0.45	1	1	ADD TO CART
6	006506109C1	shim	$0.63	1	1	ADD TO CART
6	006506110C1	SHIM	$0.63	1	1	ADD TO CART

MAHINDRA DIRECT PARTS
mahindradirectparts.com

DIFFERENTIAL (PART 1)

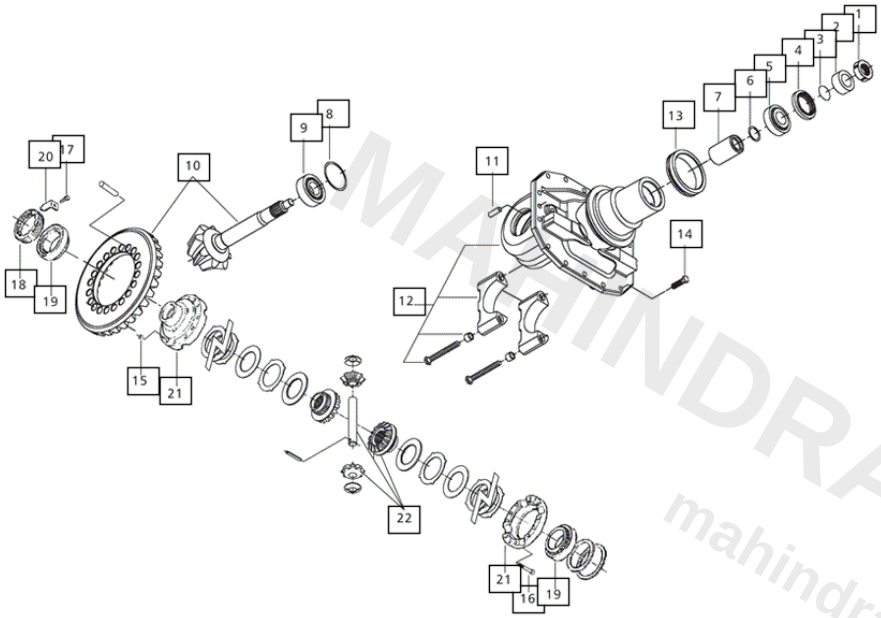

REF NO.	PART #	DESCRIPTION	PRICE	QTY NEEDED	SELECT QTY	ADD TO CART
6	006506111C1	shim	$0.63	1	1	ADD TO CART
6	006506112C1	SHIM	$1.25	1	1	ADD TO CART
7	006506113C1	spacer	$17.48	1	1	ADD TO CART
8	006506114C1	SHIM	$0.55	1	1	ADD TO CART
8	006506115C1	shim	$1.25	1	1	ADD TO CART
8	006506116C1	SHIM	$1.88	1	1	ADD TO CART
8	006506117C1	shim	$1.88	1	1	ADD TO CART
8	006506118C1	SHIM	$1.88	1	1	ADD TO CART
8	006506119C1	shim	$1.88	1	1	ADD TO CART

MAHINDRA DIRECT PARTS
mahindradirectparts.com

DIFFERENTIAL (PART 1)

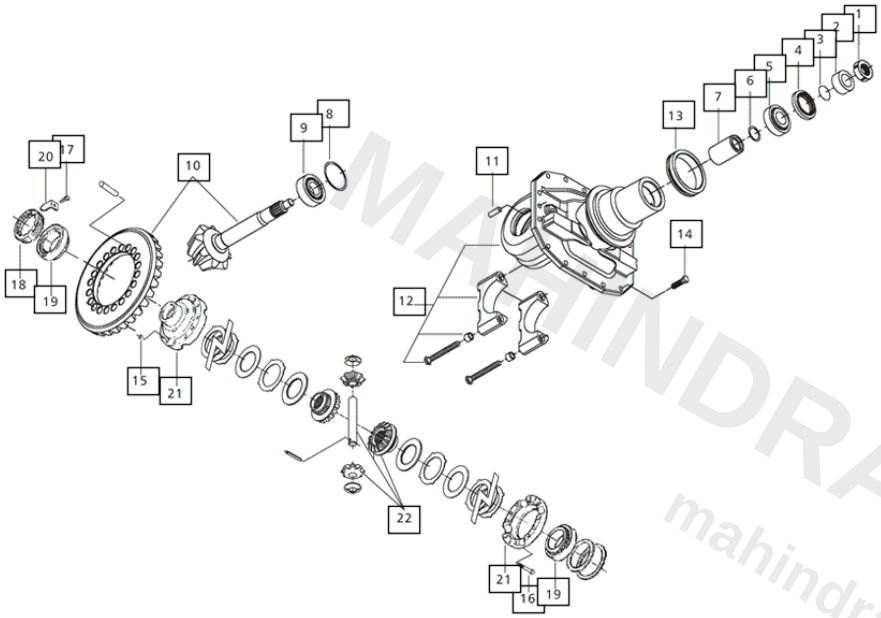

REF NO.	PART #	DESCRIPTION	PRICE	QTY NEEDED	SELECT QTY	ADD TO CART
9	006506120C1	BEARING	$426.42	1	1	ADD TO CART
10	006506121C91	BEVEL Gear Set	$2,168.44	1	1	ADD TO CART
11	006506122C1	DOWEL	$3.68	2	2	ADD TO CART
12	006506123C91	SUPPORT	$1,161.96	1	1	ADD TO CART
13	006506124C1	FLANGE	$14.72	1	1	ADD TO CART
14	006506125C1	bolt	$1.88	12	12	ADD TO CART
15	006506126C1	NUT	$0.63	12	12	ADD TO CART
16	006506127C1	bolt	$1.84	12	12	ADD TO CART
17	006506128C1	BOLT	$1.25	1	1	ADD TO CART

MAHINDRA DIRECT PARTS
mahindradirectparts.com

DIFFERENTIAL (PART 1)

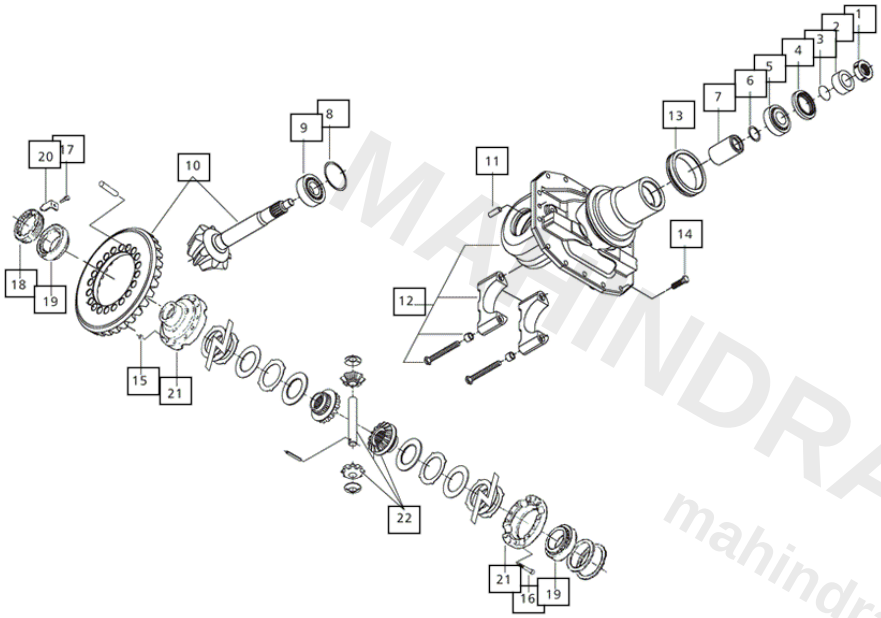

REF NO.	PART #	DESCRIPTION	PRICE	QTY NEEDED	SELECT QTY	ADD TO CART
18	006506129C1	ring Nut	$11.96	1	1	ADD TO CART
19	006506130C1	BEARING	$312.34	2	2	ADD TO CART
20	006506131C1	SHEET	$5.52	1	1	ADD TO CART
21	006506132C91	DIFFERENTIAL Ca...	$572.24	1	1	ADD TO CART
22	006506133C91	gear	$321.08	1	1	ADD TO CART

MAHINDRA DIRECT PARTS
mahindradirectparts.com

DIFFERENTIAL (PART 2)

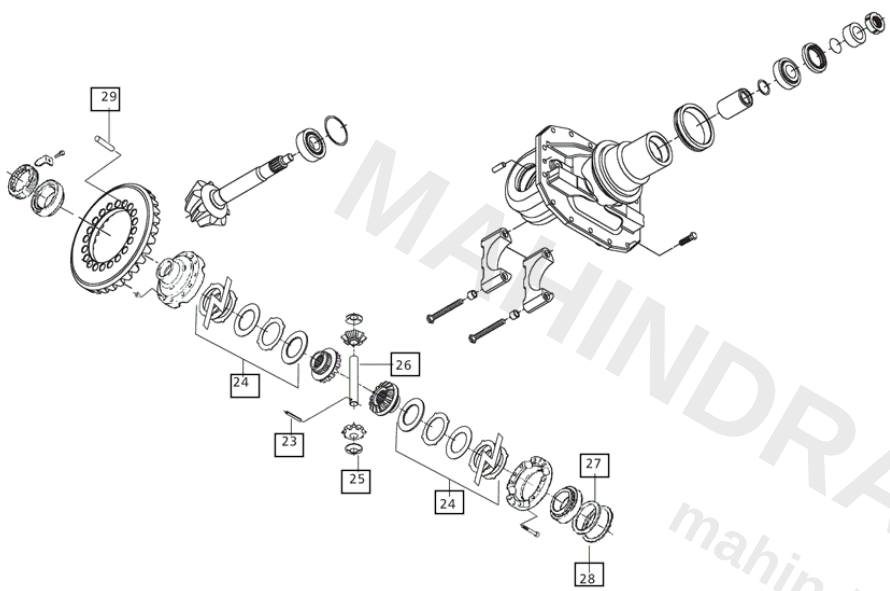

REF NO.	PART #	DESCRIPTION	PRICE	QTY NEEDED	SELECT QTY	ADD TO CART
23	006506134C1	ROLL Pin	$7.36	1	1	ADD TO CART
24	006506135C91	DISC	$127.88	2	2	ADD TO CART
25	006506136C1	FRICTION Washer	$5.52	2	2	ADD TO CART
26	006506137C1	DIFFERENTIAL Sh...	$224.48	1	1	ADD TO CART
27	006506138C1	shim	$3.68	1	1	ADD TO CART
27	006506139C1	SHIM	$3.68	1	1	ADD TO CART
27	006506140C1	shim	$5.52	1	1	ADD TO CART
27	006506141C1	SHIM	$5.52	1	1	ADD TO CART
27	006506143C1	shim	$5.52	1	1	ADD TO CART
27	006506144C1	SHIM	$2.20	1	1	ADD TO CART
28	006506145C1	spacer	$5.06	1	1	ADD TO CART
29	006506146C1	DOWEL	$2.30	2	2	ADD TO CART

MAHINDRA DIRECT PARTS
mahindradirectparts.com

HUB REDUCTION (PART 1)

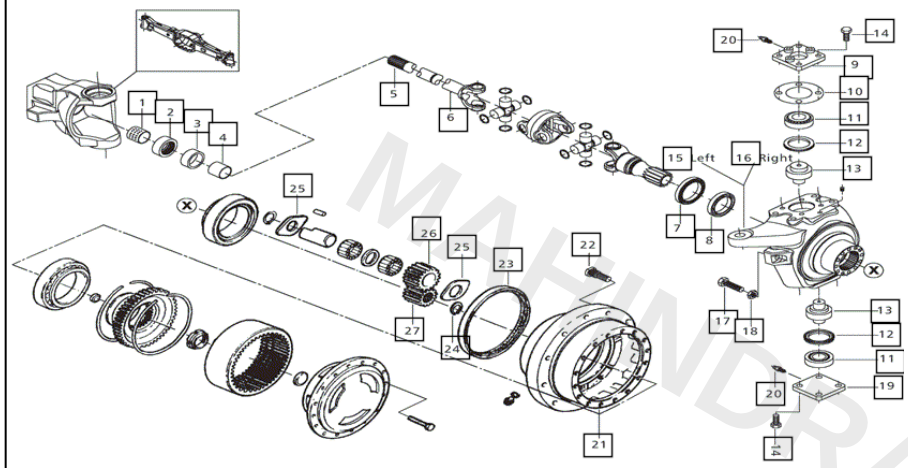

REF NO.	PART #	DESCRIPTION	PRICE	QTY NEEDED	SELECT QTY	ADD TO CART
1	006506153C1	BUSHING	$6.44	2	2	ADD TO CART
2	006506154C1	SEAL	$57.36	2	2	ADD TO CART
3	006506155C1	RING	$1.25	2	2	ADD TO CART
4	006506156C1	REDUCTION Bushi...	$29.90	2	2	ADD TO CART
5	006506157C1	HALF SHAFT Differ...	$1,733.74	1	1	ADD TO CART
6	006506158C1	HALF SHAFT Differ...	$1,470.16	1	1	ADD TO CART
7	006506159C1	SEAL	$83.72	2	2	ADD TO CART
8	006506160C1	BEARING	$51.52	2	2	ADD TO CART
9	006506161C1	COVER	$53.36	2	2	ADD TO CART

MAHINDRA DIRECT PARTS
mahindradirectparts.com

HUB REDUCTION (PART 1)

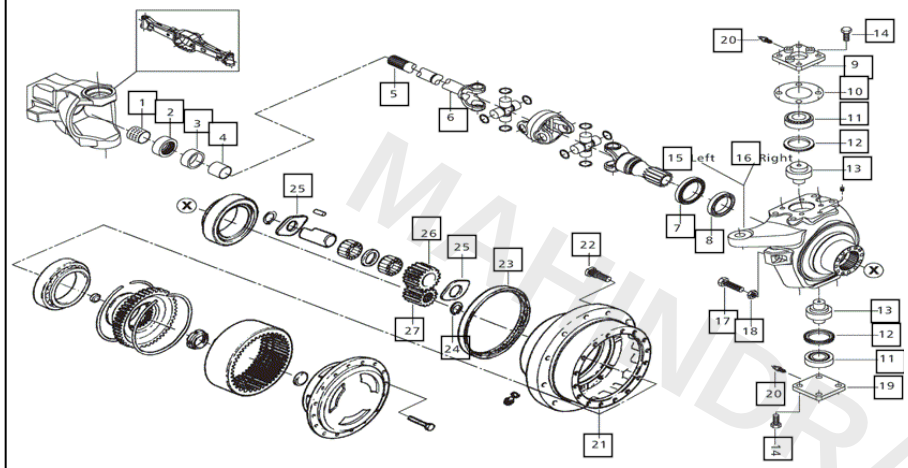

REF NO.	PART #	DESCRIPTION	PRICE	QTY NEEDED	SELECT QTY	ADD TO CART
10	006506162C1	SHIM	$2.30	1	1	ADD TO CART
10	006506163C1	SHIM	$3.68	1	1	ADD TO CART
10	006506164C1	SHIM	$3.68	1	1	ADD TO CART
10	006506165C1	SHIM	$3.68	1	1	ADD TO CART
10	006506166C1	SHIM	$3.68	1	1	ADD TO CART
11	006506167C1	BEARING	$64.40	4	4	ADD TO CART
11	006506168C1	BEARING	$8.74	4	4	ADD TO CART
12	006506169C1	SEAL	$1.84	4	4	ADD TO CART
13	006506170C1	PIVOT Pin	$239.20	4	4	ADD TO CART

MAHINDRA DIRECT PARTS
mahindradirectparts.com

HUB REDUCTION (PART 1)

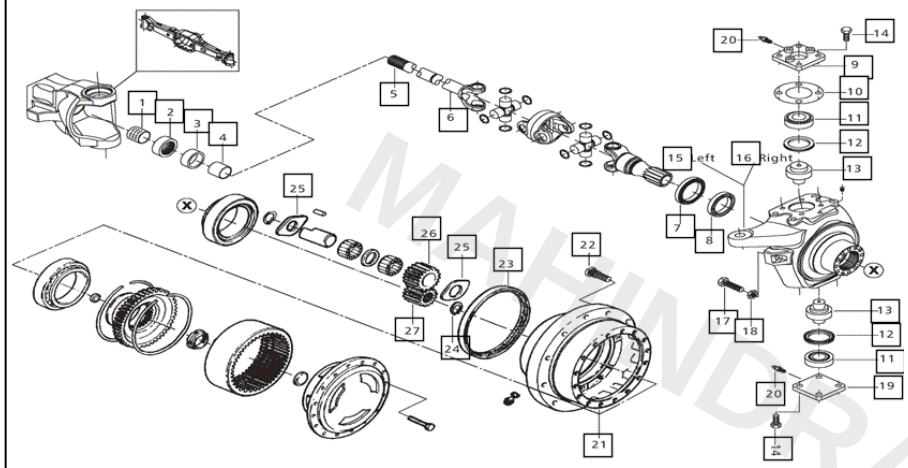

REF NO.	PART #	DESCRIPTION	PRICE	QTY NEEDED	SELECT QTY	ADD TO CART
14	006506171C1	BOLT	$5.52	16	16	ADD TO CART
15	006506172C1	STEERING Case	$805.00	1	1	ADD TO CART
16	006506173C1	STEERING Case	$2,607.28	1	1	ADD TO CART
17	006506174C1	BOLT	$380.26	2	2	ADD TO CART
18	006506175C1	NUT	$29.44	2	2	ADD TO CART
19	006506176C1	COVER	$55.20	2	2	ADD TO CART
20	006506177C1	GREASE Fitting	$38.64	4	4	ADD TO CART
21	006506178C1	WHEEL Hub	$2,002.84	2	2	ADD TO CART
22	006506179C1	WHEEL Stud	$3.22	16	16	ADD TO CART

MAHINDRA DIRECT PARTS
mahindradirectparts.com

HUB REDUCTION (PART 1)

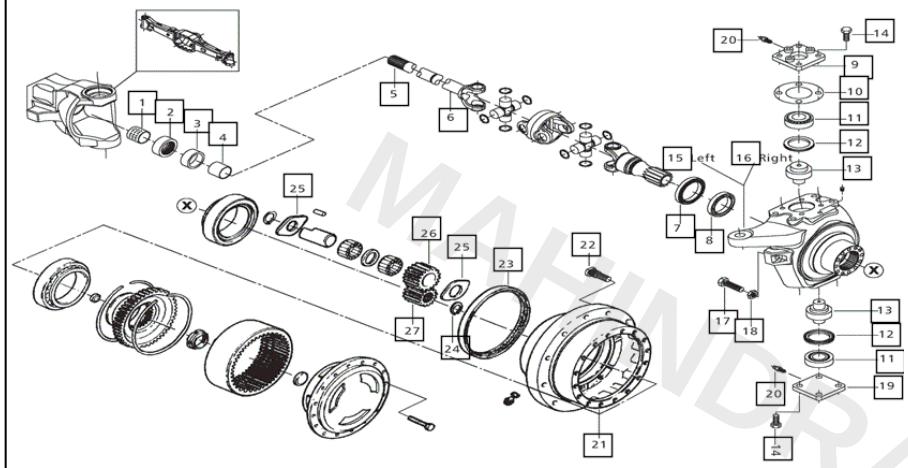

REF NO.	PART #	DESCRIPTION	PRICE	QTY NEEDED	SELECT QTY	ADD TO CART
23	006506180C1	SEAL	$174.80	2	2	ADD TO CART
24	006506181C1	CIRCLIP	$5.52	2	2	ADD TO CART
25	006506182C1	FRICTION Washer	$1.25	12	12	ADD TO CART
26	006506183C1	PLANET Gear	$393.76	6	6	ADD TO CART
27	006506184C1	PINION	$417.68	2	2	ADD TO CART

MAHINDRA DIRECT PARTS
mahindradirectparts.com

HUB REDUCTION (PART 2)

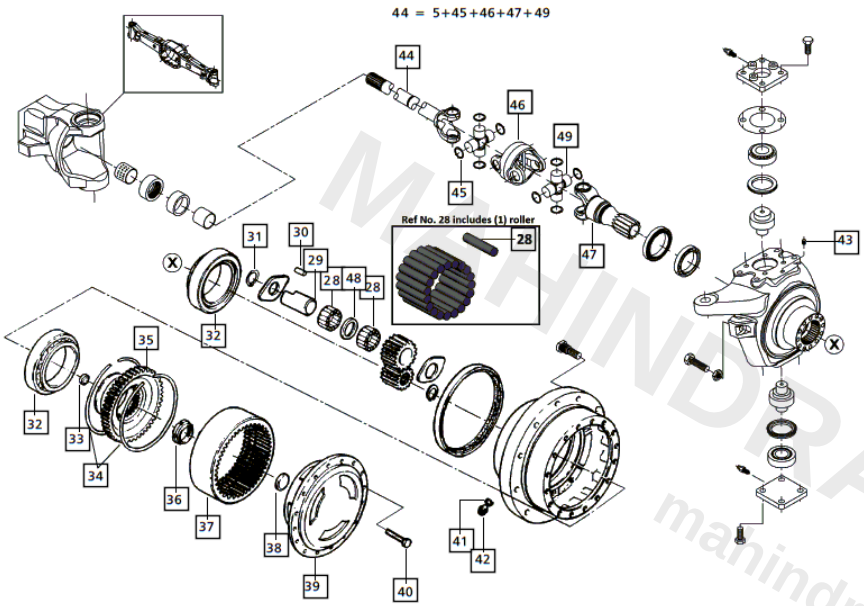

REF NO.	PART #	DESCRIPTION	PRICE	QTY NEEDED	SELECT QTY	ADD TO CART
28	006506185C1	ROLLER	$3.68	2	2	ADD TO CART
29	006506186C1	PIN	$84.64	6	6	ADD TO CART
30	006506187C1	ROLLER	$0.40	6	6	ADD TO CART
31	006506188C1	CIRCLIP	$0.35	6	6	ADD TO CART
32	006506189C1	BEARING	$139.84	4	4	ADD TO CART
33	006506190C1	FRICTION Washer	$34.96	2	2	ADD TO CART
34	006506191C1	CIRCLIP	$5.52	4	4	ADD TO CART
35	006506192C1	RING Gear Support	$1,122.86	2	2	ADD TO CART
36	006506193C1	RING Nut	$12.88	2	2	ADD TO CART

MAHINDRA DIRECT PARTS
mahindradirectparts.com

HUB REDUCTION (PART 2)

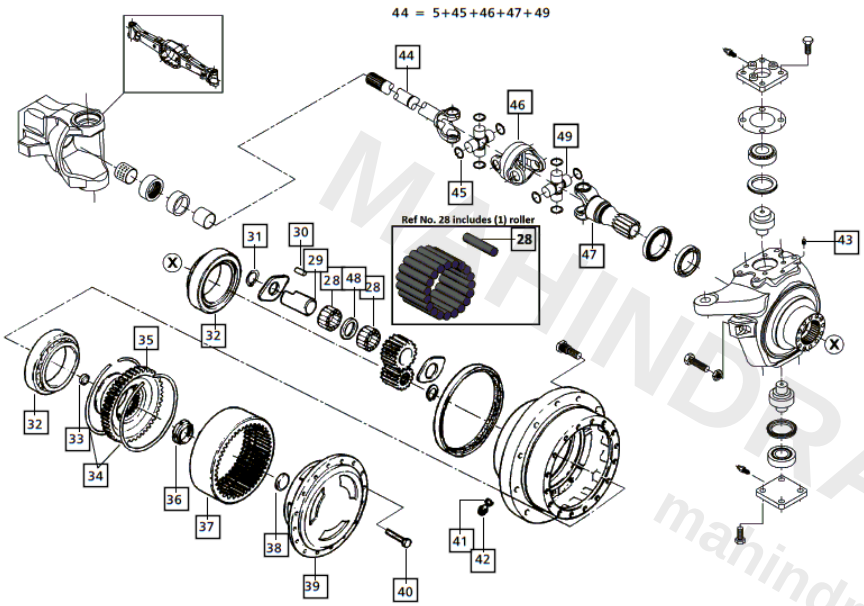

REF NO.	PART #	DESCRIPTION	PRICE	QTY NEEDED	SELECT QTY	ADD TO CART
37	006506194C1	RING Gear	$1,384.60	2	2	ADD TO CART
38	006506195C1	FRICTION Washer	$11.04	2	2	ADD TO CART
39	006506196C1	PLANET Gear Carri...	$1,580.56	2	2	ADD TO CART
40	006506197C1	CYLINDER Bolt	$5.52	32	32	ADD TO CART
41	006506198C1	SEAL Washer	$0.85	2	2	ADD TO CART
42	006506199C1	PLUG	$11.04	2	2	ADD TO CART
43	006506200C1	PLUG	$1.05	2	2	ADD TO CART
44	006506201C1	JOINT	$1,069.96	2	2	ADD TO CART
45	006506202C1	CIRCLIP	$7.36	8	8	ADD TO CART

MAHINDRA DIRECT PARTS
mahindradirectparts.com

HUB REDUCTION (PART 2)

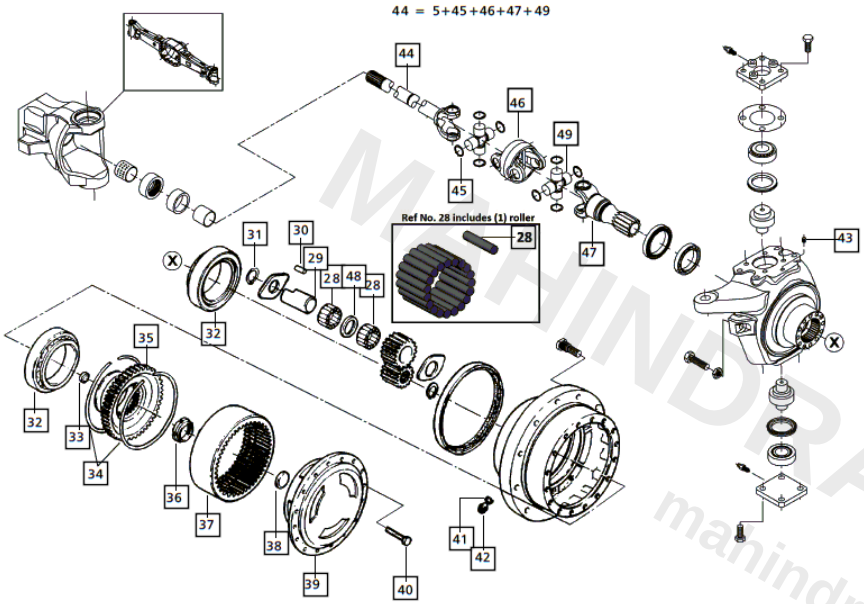

REF NO.	PART #	DESCRIPTION	PRICE	QTY NEEDED	SELECT QTY	ADD TO CART
46	006506203C1	JOINT Centre Secti...	—	1		NOT AVAILABLE
46	006506204C1	JOINT Centre Secti...	$764.98	1	1	ADD TO CART
47	006506205C1	HALF Shaft	—	1		NOT AVAILABLE
47	006506206C1	HALF Shaft	$809.60	1	1	ADD TO CART
48	006506207C1	SPACER	$5.52	6	6	ADD TO CART
49	006506208C1	JOINT Cross	$270.02	2	2	ADD TO CART
49	A730.06.450.34S	JOINT CROSS SET	$191.36	2	2	ADD TO CART

MAHINDRA DIRECT PARTS
mahindradirectparts.com

STEERING

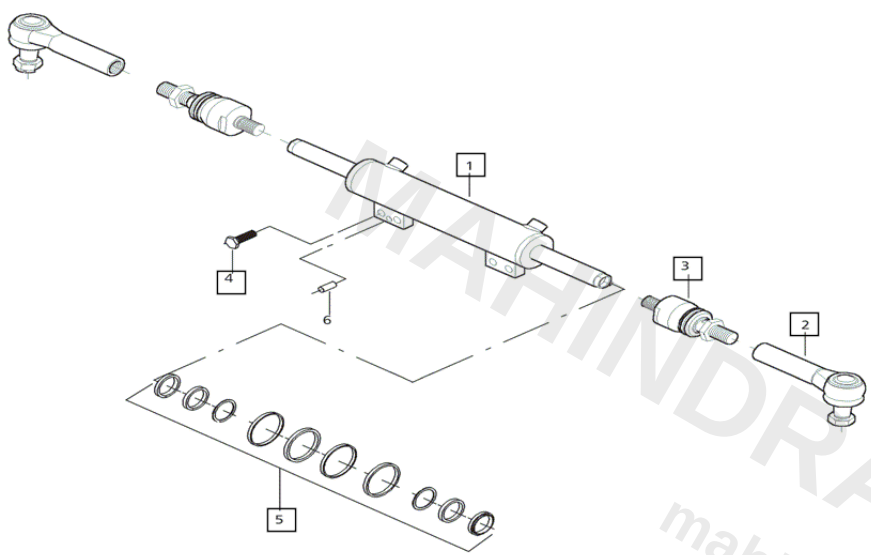

REF NO.	PART #	DESCRIPTION	PRICE	QTY NEEDED	SELECT QTY	ADD TO CART
1	006506210C1	CYLINDER	$2,760.00	1	1	ADD TO CART
2	006506211C1	TRACTION Rod	$192.74	2	2	ADD TO CART
3	006506212C1	ARTICULATION	$117.30	2	2	ADD TO CART
4	006506213C1	BOLT	$2.30	4	4	ADD TO CART
5	006506214C91	SEAL Kit	$308.20	1	1	ADD TO CART

MAHINDRA DIRECT PARTS
mahindradirectparts.com

TRUNNION

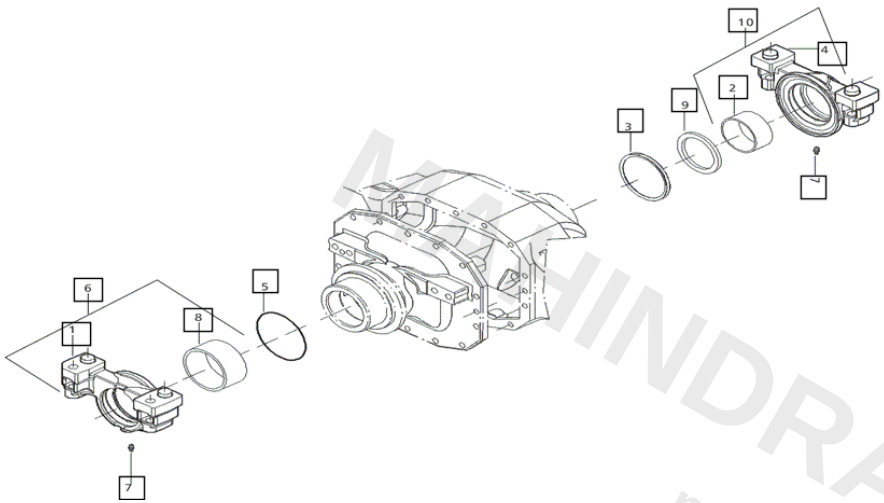

REF NO.	PART #	DESCRIPTION	PRICE	QTY NEEDED	SELECT QTY	ADD TO CART
1	006506215C1	SUPPORT	$934.26	1	1	ADD TO CART
2	006506216C1	THRUST Bushing	$80.96	1	1	ADD TO CART
3	006506217C1	RING	$33.12	1	1	ADD TO CART
4	006506218C1	SUPPORT	$579.14	1	1	ADD TO CART
5	006506219C1	O-RING	$11.04	1	1	ADD TO CART
6	006506220C91	SUPPORT	$578.22	1	1	ADD TO CART
7	006506221C1	GREASE Fitting	$5.52	1	1	ADD TO CART
8	006506222C1	THRUST Bushing	$573.16	1	1	ADD TO CART
9	006506223C1	RING	$12.88	1	1	ADD TO CART
10	006506224C91	SUPPORT	$397.44	1	1	ADD TO CART

MAHINDRA DIRECT PARTS
mahindradirectparts.com

FRONT AXLE SUPPORT AND DRIVE

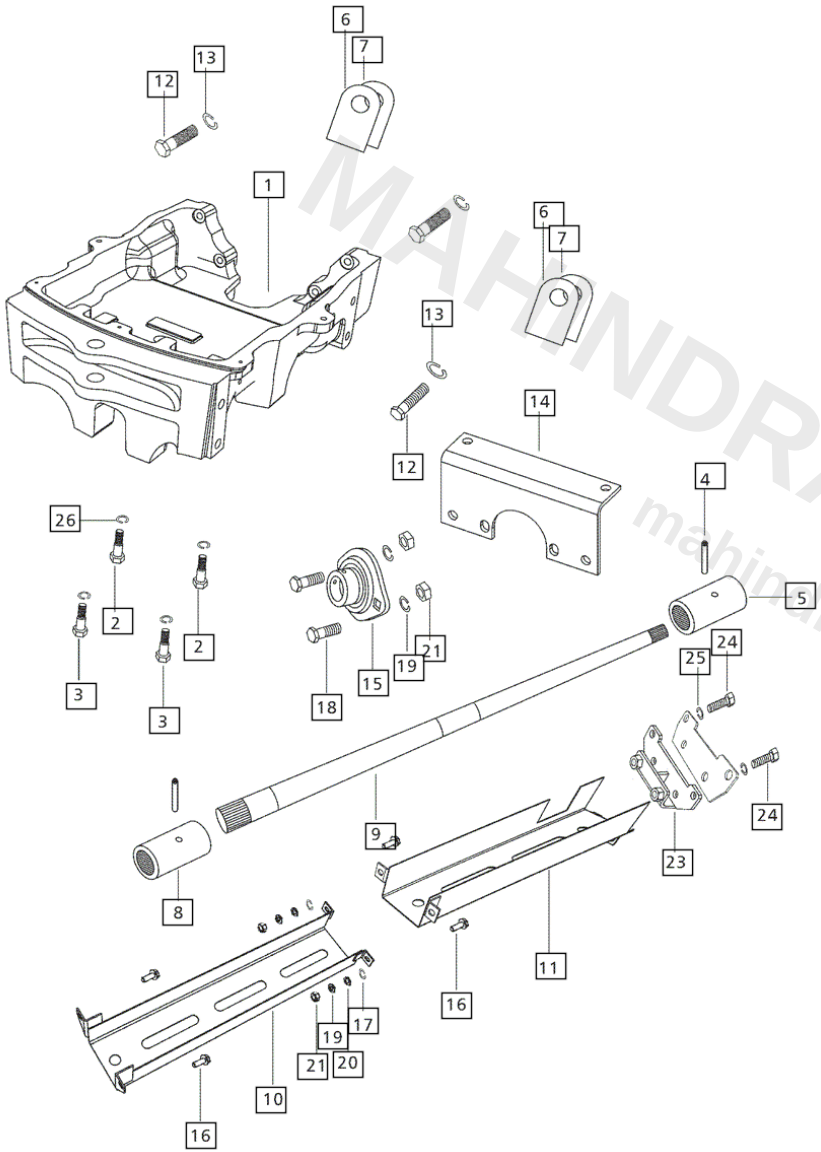

REF NO.	PART #	DESCRIPTION	PRICE	QTY NEEDED	SELECT QTY	ADD TO CART
1	E008001010C1	SUPPORT Front A...	$2,553.64	1	1	ADD TO CART
2	E007602656D1	BOLT Rear Pillow...	$14.72	2	2	ADD TO CART
3	E007602657D1	BOLT Front Pillow...	$29.44	2	2	ADD TO CART
4	000010778P03	ROLL PIN 8 x 45	$0.50	2	2	ADD TO CART
5	006503468C1	SLEEVE Axle End...	$80.96	1	1	ADD TO CART
6	007600411C1	SHIM Front Axle Su...	$5.52	2	2	ADD TO CART
7	007600412C1	SHIM Front Axle Su...	$0.30	2	2	ADD TO CART
8	007600630D1	SLEEVE Drop Box...	$43.71	1	1	ADD TO CART
9	E006505468C1	SHAFT Propeller D...	$355.12	1	1	ADD TO CART

MAHINDRA DIRECT PARTS
mahindradirectparts.com

FRONT AXLE SUPPORT AND DRIVE

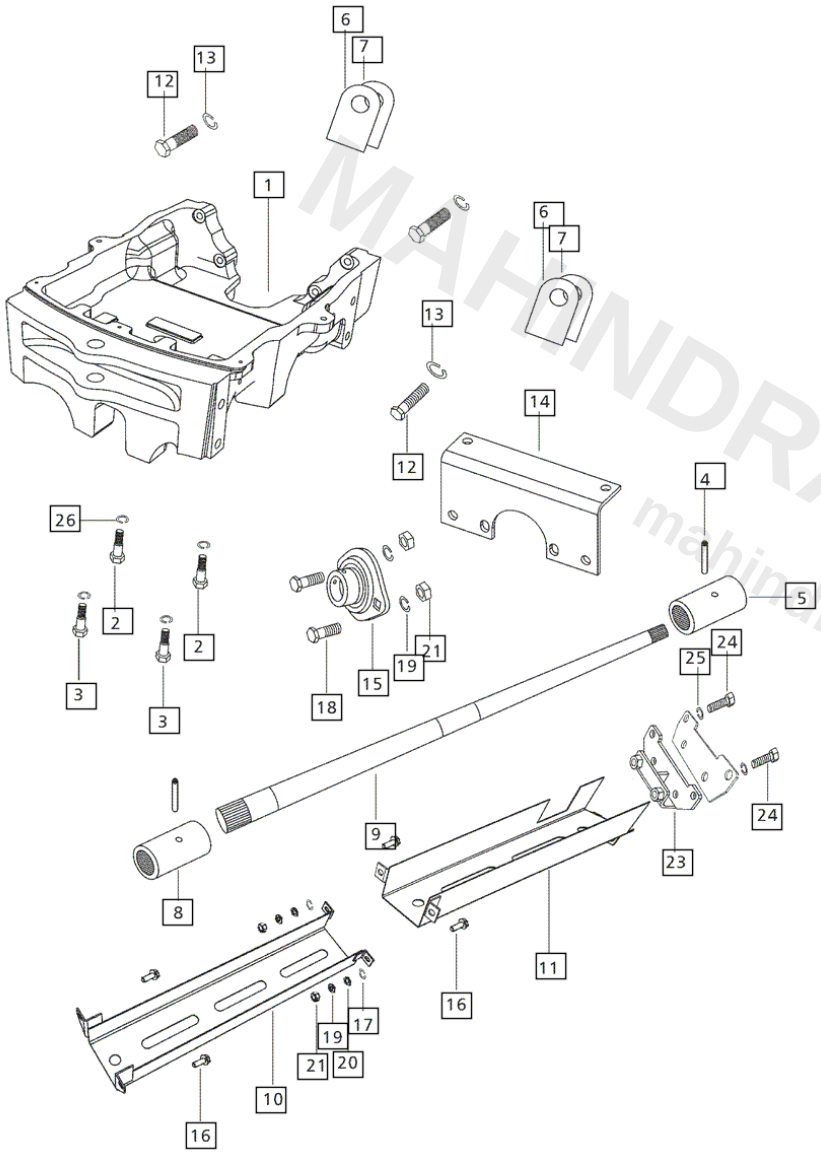

REF NO.	PART #	DESCRIPTION	PRICE	QTY NEEDED	SELECT QTY	ADD TO CART
10	E008002063C11	COVER Input Shaft...	$106.72	1	1	ADD TO CART
11	E007602243B11	COVER Input Shaft...	$108.56	1	1	ADD TO CART
12	000040341C08	BOLT Hex. Head M...	$11.04	6	6	ADD TO CART
13	001082015R2	WASHER 5/8" Spri...	$0.65	6	6	ADD TO CART
14	E007535270C1	BRACKET Interme...	$62.56	1	1	ADD TO CART
15	E006500998C1	BEARING Intermed...	$117.85	1	1	ADD TO CART
16	000020313E05	BOLT Flanged Hex...	$0.97	4	4	ADD TO CART
17	005555988R1	WASHER M10 Spri...	$0.05	4	4	ADD TO CART
18	000020313E05	BOLT Flanged Hex...	$0.97	2	2	ADD TO CART

MAHINDRA DIRECT PARTS
mahindradirectparts.com

FRONT AXLE SUPPORT AND DRIVE

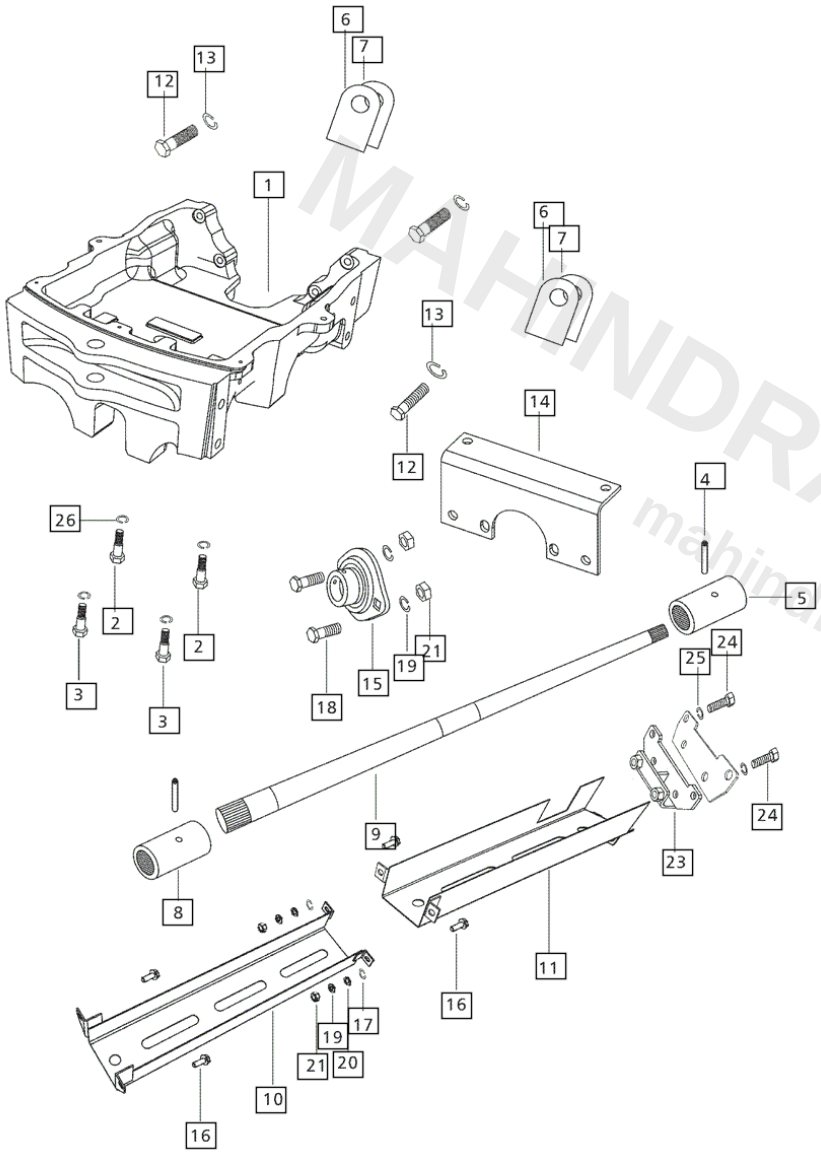

REF NO.	PART #	DESCRIPTION	PRICE	QTY NEEDED	SELECT QTY	ADD TO CART
19	005555988R1	WASHER M10 Spri...	$0.05	4	4	ADD TO CART
20	000030184R1	WASHER Plain 24...	$0.49	4	4	ADD TO CART
21	005554365R1	NUT M10 x 1.5	$0.65	4	4	ADD TO CART
23	E007603231B91	BRACKET For Rea...	$23.92	1	1	ADD TO CART
24	001081607R1	BOLT	$9.20	2	2	ADD TO CART
25	000934309R1	WASHER Spring M8	$0.10	2	2	ADD TO CART
26	005555990R1	WASHER SPRING...	$2.39	4	4	ADD TO CART

MAHINDRA DIRECT PARTS
mahindradirectparts.com