FRONT AXLE SUPPORT AND DRIVE (PART 1)

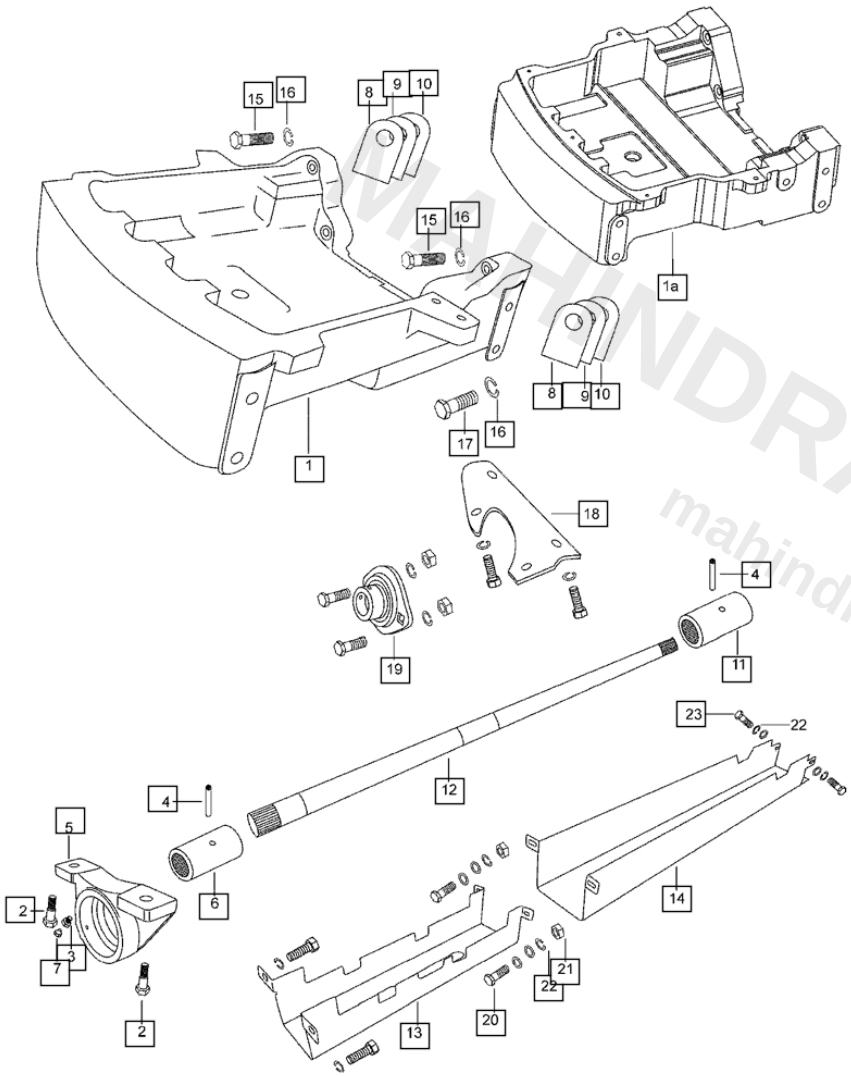

REF NO.	PART #	DESCRIPTION	PRICE	QTY NEEDED	SELECT QTY	ADD TO CART
1	TEMP723	HOUSING, Pinion	—	AR		NOT AVAILABLE
2	000010753P03	BOLT, M18 x 2.5	$27.60	2	2	ADD TO CART
3	000010755P03	BOLT Hollow Pillow...	—	1		NOT AVAILABLE
4	000010778P03	ROLL PIN 8 x 45	$0.50	2	2	ADD TO CART
5	000017302P03	REAR Pillow Block	—	1		NOT AVAILABLE
6	006503468C1	SLEEVE Axle End H...	$80.96	1	1	ADD TO CART
7	007600185C1	GREASE Nipple M6	$0.65	2	2	ADD TO CART
8	007600411C1	SHIM Front Axle Sup...	$5.52	1	1	ADD TO CART
9	007600412C1	SHIM Front Axle Sup...	$0.30	1	1	ADD TO CART
10	007600413C1	SHIM Front Axle Sup...	$2.21	1	1	ADD TO CART
11	007600086C1	SLEEVE Drop Box Si...	$176.64	1	1	ADD TO CART
12	000010746P03	INPUT Shaft Front A...	$607.20	1	1	ADD TO CART

MAHINDRA DIRECT PARTS
mahindradirectparts.com

FRONT AXLE SUPPORT AND DRIVE (PART 1)

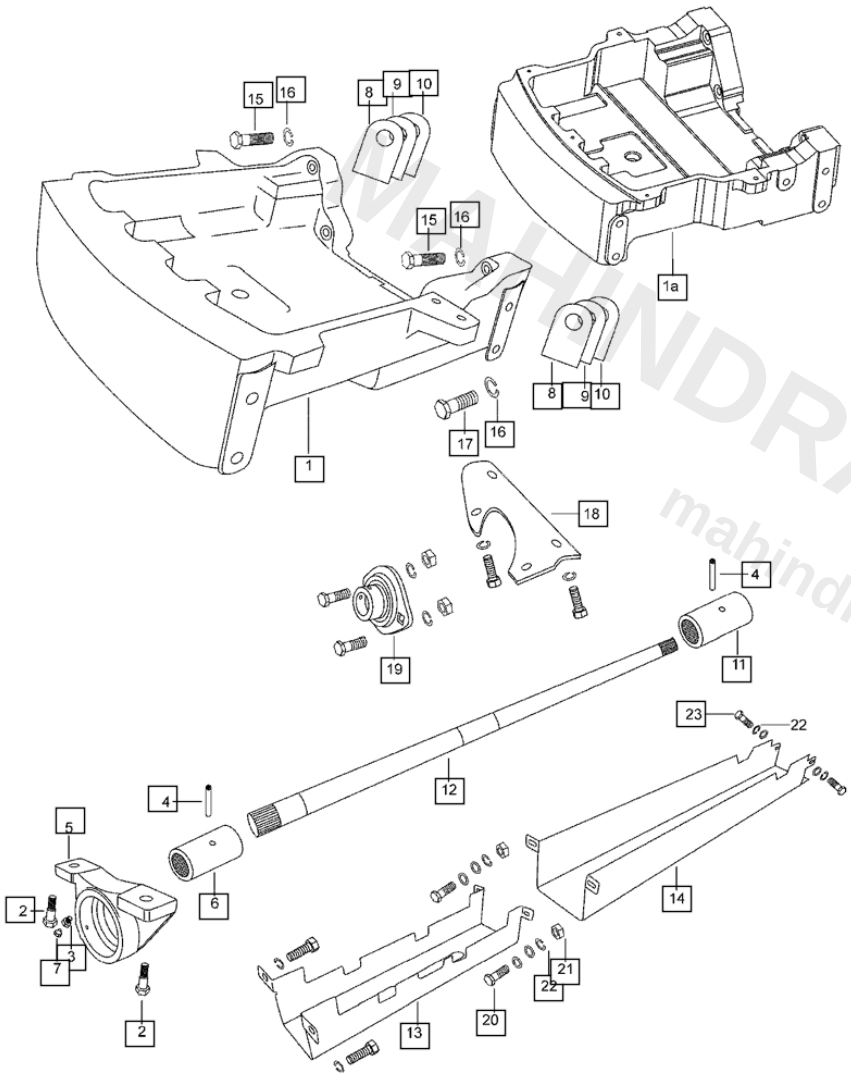

REF NO.	PART #	DESCRIPTION	PRICE	QTY NEEDED	SELECT QTY	ADD TO CART
13	007535685C1	COVER Input Shaft F...	—	1		NOT AVAILABLE
14	000017309P03	COVER Input Shaft F...	—	1		NOT AVAILABLE
15	000040341C08	BOLT Hex. Head M1...	$11.04	6	6	ADD TO CART
16	001082015R2	WASHER 5/8'· Spring L...	$1.84	6	6	ADD TO CART
17	TEMP723	HOUSING, Pinion	—	AR		NOT AVAILABLE
18	000010749P03	BRACKET Intermedi...	—	1		NOT AVAILABLE
19	006500998C1	BEARING Intermedia...	$117.85	1	1	ADD TO CART
20	000061276M01	BOLT Hex M8 x 1.25...	$0.30	2	2	ADD TO CART
21	005553017R1	NUT Lock For Slow -...	$0.49	2	2	ADD TO CART
22	000934309R1	WASHER Spring M8	$0.10	4	4	ADD TO CART
23	000020310E05	BOLT M10 x 1.5 x 35	$1.84	2	2	ADD TO CART

MAHINDRA DIRECT PARTS
mahindradirectparts.com

FRONT AXLE SUPPORT AND DRIVE (PART 2)

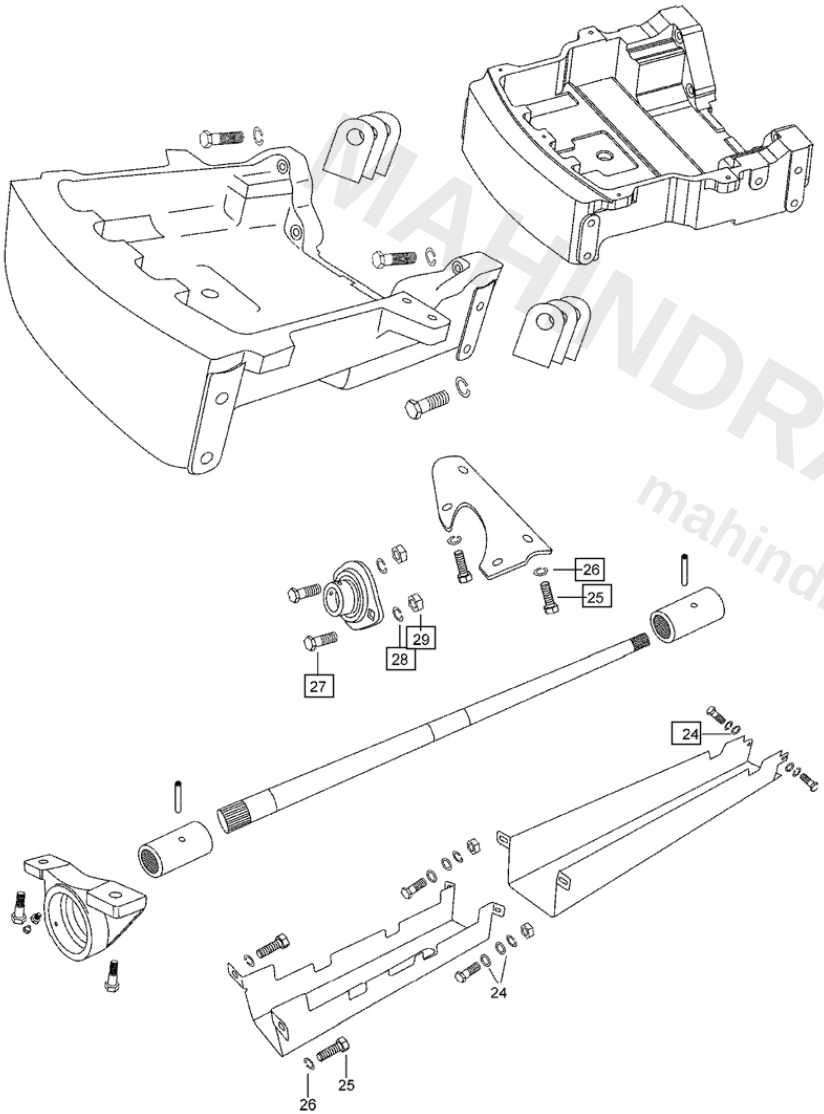

REF NO.	PART #	DESCRIPTION	PRICE	QTY NEEDED	SELECT QTY	ADD TO CART
24	000120393	WASHER Plain .343...	$0.05	6	6	ADD TO CART
25	000011104P03	BOLT, Hex M12 x 25...	$7.36	4	4	ADD TO CART
26	005550700R1	WASHER Spring M12	$0.10	4	4	ADD TO CART
27	000020313E05	BOLT Flanged Hex H...	$0.97	2	2	ADD TO CART
28	000555988P2	WASHER Spring M10	—	2		NOT AVAILABLE
29	005554365R1	NUT M10 x 1.5	$0.65	2	2	ADD TO CART

MAHINDRA DIRECT PARTS
mahindradirectparts.com

AXLE HOUSING

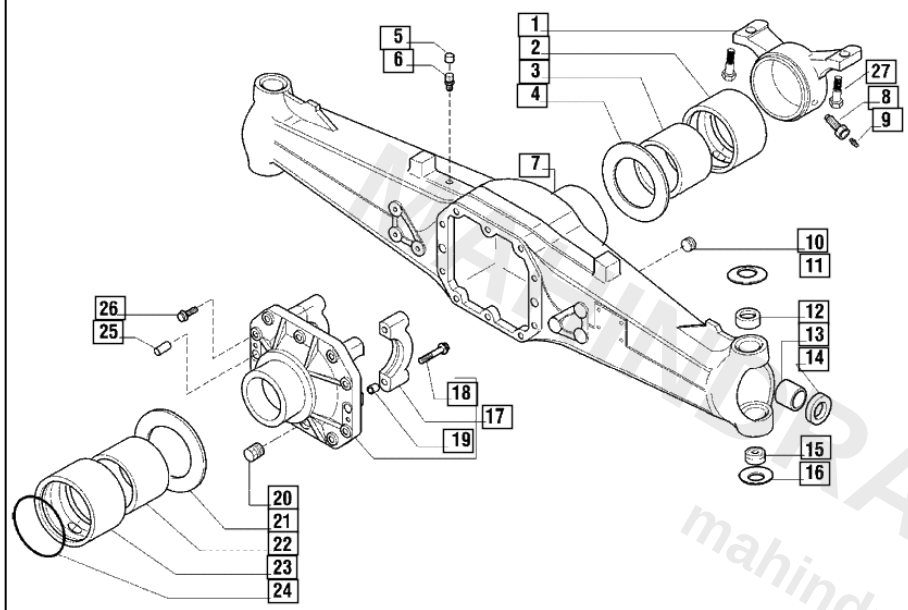

REF NO.	PART #	DESCRIPTION	PRICE	QTY NEEDED	SELECT QTY	ADD TO CART
1	006500327C1	FRONT Support - 12...	—	1		NOT AVAILABLE
2	006500328C1	BUSH	$103.96	1	1	ADD TO CART
3	006500329C1	BUSH-101565	$91.08	1	1	ADD TO CART
4	006500330C1	THRUST Washer	$134.32	1	1	ADD TO CART
5	006500331C1	PROTECTING Cover...	$1.84	1	1	ADD TO CART
6	006500332C1	BREATHER M10 x 01	$18.40	1	1	ADD TO CART
7	006500334C1	AXLE Housing - 1445...	$3,618.08	1	1	ADD TO CART
8	006500335C1	BOLT	$25.76	1	1	ADD TO CART
9	006500383C1	GREASE Nipple M6x1	$1.88	1	1	ADD TO CART

MAHINDRA DIRECT PARTS
mahindradirectparts.com

AXLE HOUSING

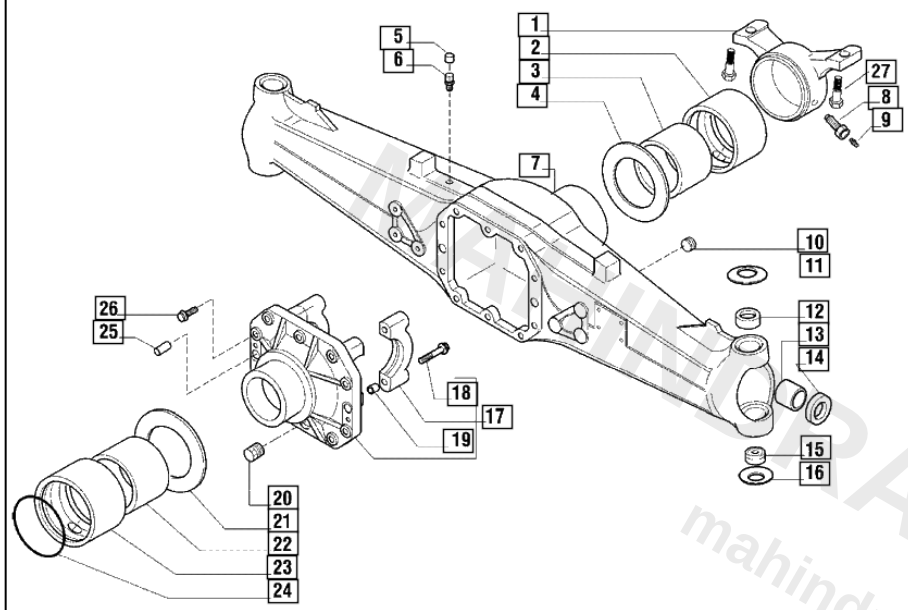

REF NO.	PART #	DESCRIPTION	PRICE	QTY NEEDED	SELECT QTY	ADD TO CART
10	006500337C1	PLUG M24X1.5 - 128...	—	2		NOT AVAILABLE
11	006500340C1	BELLEVILLE Washer	$5.52	2	2	ADD TO CART
12	006500343C1	BUSH - 124615	—	2		NOT AVAILABLE
13	006500344C1	BUSH	$11.50	2	2	ADD TO CART
14	006500346C1	SEAL Ring- 126398	$53.36	2	2	ADD TO CART
15	006500347C1	SPHERICAL Bearing	$35.42	2	2	ADD TO CART
16	006500348C1	BELLEVILLE Washer...	$3.22	2	2	ADD TO CART
17	006500349C1	DIFFERENTIAL Sup...	—	1		NOT AVAILABLE
18	006500350C1	BOLT - 126022	$5.52	4	4	ADD TO CART

MAHINDRA DIRECT PARTS
mahindradirectparts.com

AXLE HOUSING

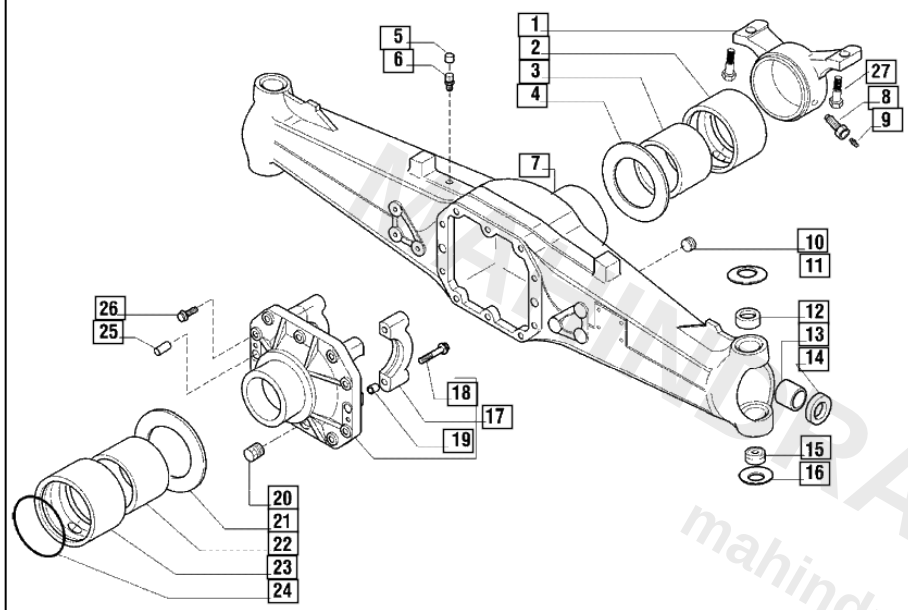

REF NO.	PART #	DESCRIPTION	PRICE	QTY NEEDED	SELECT QTY	ADD TO CART
19	006500351C1	CENTERING Bush	$2.30	4	4	ADD TO CART
20	006500352C1	PLUG M24X1.5 - 092...	—	1		NOT AVAILABLE
21	006500353C1	THRUST Washer	—	1		NOT AVAILABLE
22	006500354C1	BUSH - 127503	—	1		NOT AVAILABLE
23	006500355C1	BUSH	$141.22	1	1	ADD TO CART
24	006500356C1	O-RING	$2.76	1	1	ADD TO CART
25	006500357C1	PIN D15 x 35	—	1		NOT AVAILABLE
26	006500358C1	BOLT M12X33 - 125...	—	10		NOT AVAILABLE
27	000010753P03	BOLT, M18 x 2.5	$27.60	2	2	ADD TO CART

MAHINDRA DIRECT PARTS
mahindradirectparts.com

SWIVEL HOUSING AND STEERING CYLINDER (PART 1)

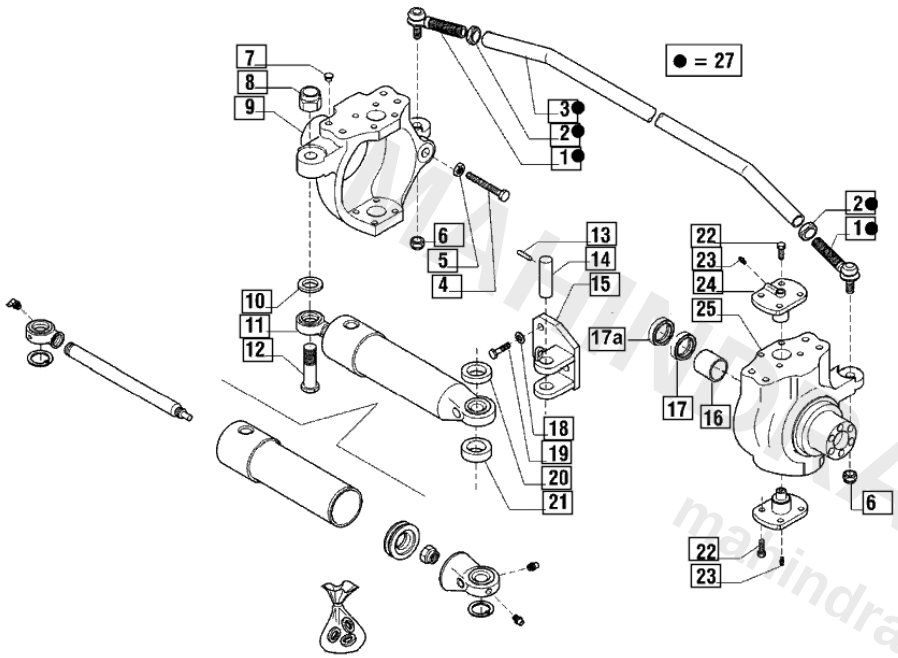

REF NO.	PART #	DESCRIPTION	PRICE	QTY NEEDED	SELECT QTY	ADD TO CART
27	006500388C1	STEERING Rod Assy	$921.38	1	1	ADD TO CART
1	006500359C1	BALL Joint	$219.88	2	2	ADD TO CART
2	006500360C1	NUT M20x1.5	$2.30	2	2	ADD TO CART
3	006500361C1	STEERING Rod	$1,000.96	1	1	ADD TO CART
4	006500362C1	BOLT M16x75	$13.98	2	2	ADD TO CART
5	006500363C1	NUT M16	—	2		NOT AVAILABLE
6	006500364C1	NUT M14x1.5	$2.76	2	2	ADD TO CART
7	006500365C1	PLUG D14.6x9.5	$1.84	8	8	ADD TO CART
8	006500366C1	NUT Self-lock M22 x...	$15.64	1	1	ADD TO CART

MAHINDRA DIRECT PARTS
mahindradirectparts.com

SWIVEL HOUSING AND STEERING CYLINDER (PART 1)

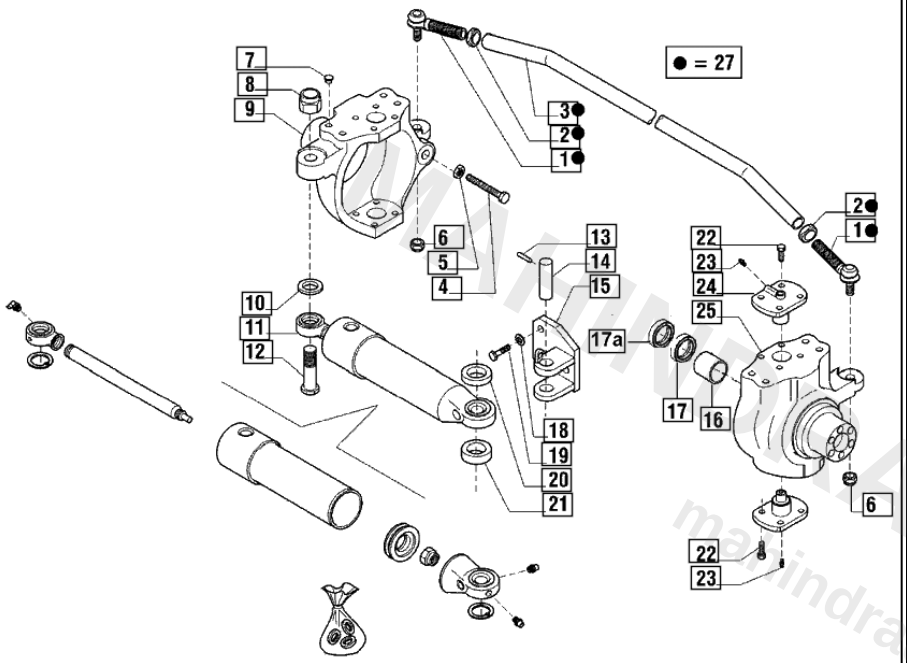

REF NO.	PART #	DESCRIPTION	PRICE	QTY NEEDED	SELECT QTY	ADD TO CART
9	006502139C1	SWIVEL Housing LH	—	1		NOT AVAILABLE
10	006500369C1	WASHER 30 x 22.1 x 4	$27.60	1	1	ADD TO CART
11	006500370C1	STEERING Cylinder	$2,307.82	1	1	ADD TO CART
12	006500371C1	PIN D22x100	$161.46	1	1	ADD TO CART
13	006500372C1	SPLIT Pin D8 x 36	$9.20	1	1	ADD TO CART
14	006500375C1	PIN D22x95	$42.78	1	1	ADD TO CART
15	006500373C1	CLAMP	$417.68	1	1	ADD TO CART
16	006500374C1	BUSH	$17.48	2	2	ADD TO CART
17	006502140C1	SEAL Ring	$40.94	2	2	ADD TO CART

MAHINDRA DIRECT PARTS
mahindradirectparts.com

SWIVEL HOUSING AND STEERING CYLINDER (PART 1)

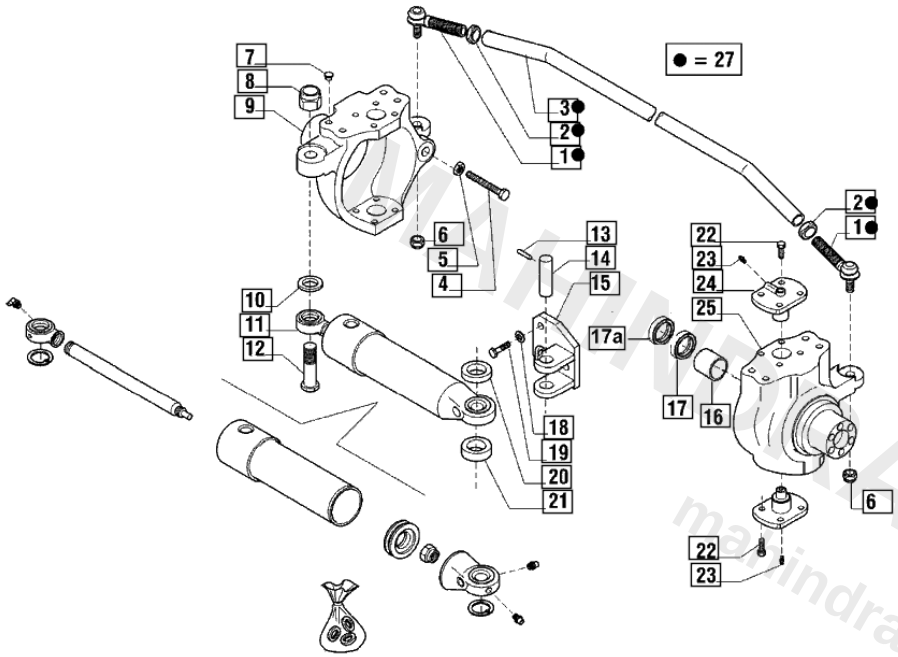

REF NO.	PART #	DESCRIPTION	PRICE	QTY NEEDED	SELECT QTY	ADD TO CART
18	006500378C1	RING D14 - 023120	$1.84	3	3	ADD TO CART
19	006500379C1	BOLT M14x35	$9.20	3	3	ADD TO CART
20	006500380C1	SPACER 33.7X22.1X...	$51.98	1	1	ADD TO CART
21	006500381C1	SPACER 33.7x22.1x11	$16.10	1	1	ADD TO CART
22	006500382C1	Bolt M12x1.75x30	$5.25	16	16	ADD TO CART
23	006500383C1	GREASE Nipple M6x1	$1.88	4	4	ADD TO CART
24	006500384C1	KING Pin - 128904	$73.60	2	2	ADD TO CART
25	006502141C1	SWIVEL Housing RH	$2,074.14	1	1	ADD TO CART

MAHINDRA DIRECT PARTS
mahindradirectparts.com

SWIVEL HOUSING AND STEERING CYLINDER (PART 2)

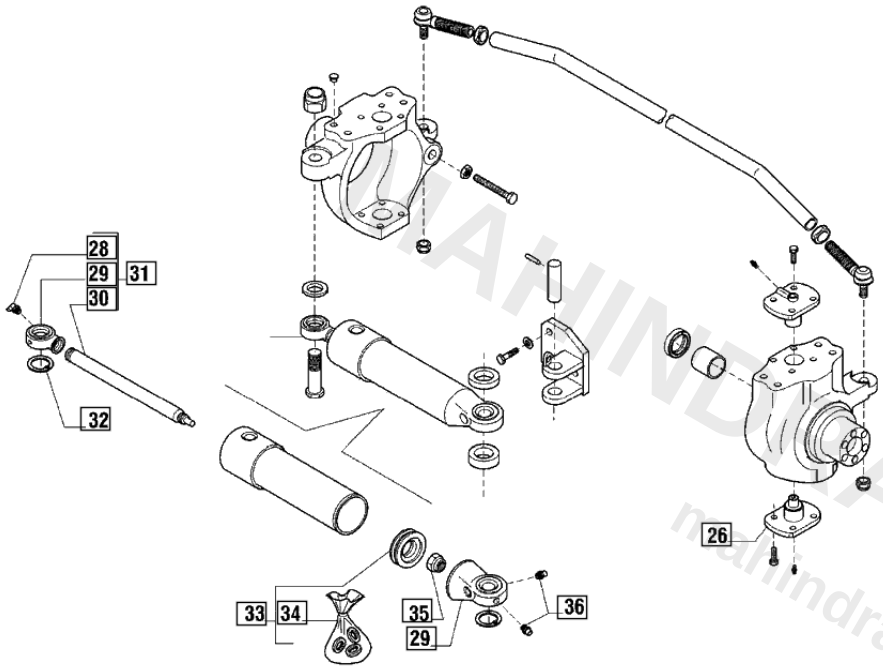

REF NO.	PART #	DESCRIPTION	PRICE	QTY NEEDED	SELECT QTY	ADD TO CART
26	006500387C1	KING Pin	$71.76	2	2	ADD TO CART
28	006500389C1	GREASE Nipple M6x1	—	1		NOT AVAILABLE
29	006500390C1	BALL Joint - 043421	—	2		NOT AVAILABLE
30	006500391C1	CYLINDER Head	—	1		NOT AVAILABLE
31	006500392C1	ROD Assy - 049030	$668.38	1	1	ADD TO CART
32	006500393C1	CIRCLIP	$23.92	2	2	ADD TO CART
33	006500394C1	PISTON And Cylinde...	$399.99	1	1	ADD TO CART
34	006500395C1	CYLINDER Seal Kit	$302.22	1	1	ADD TO CART
35	006500396C1	LOCKNUT M16X1.5...	—	1		NOT AVAILABLE
36	006500383C1	GREASE Nipple M6x1	$1.88	2	2	ADD TO CART

MAHINDRA DIRECT PARTS
mahindradirectparts.com

BEVEL GEAR/PINION SET

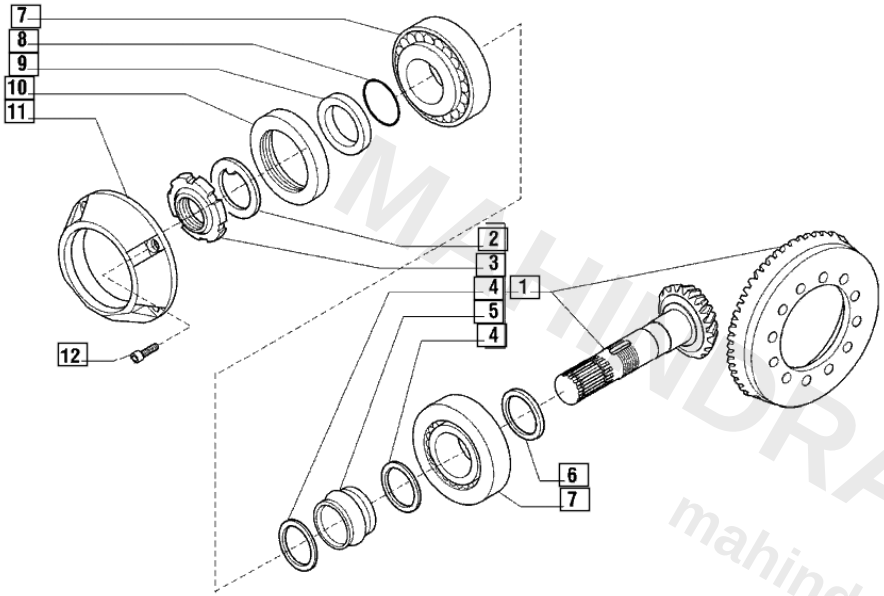

REF NO.	PART #	DESCRIPTION	PRICE	QTY NEEDED	SELECT QTY	ADD TO CART
1	006500397C1	BEVEL Gear /Pinion...	$2,107.72	1	1	ADD TO CART
2	006500398C1	LOCKWASHER	$5.06	1	1	ADD TO CART
3	006500399C1	RING Nut M35X1.5 -...	$34.04	1	1	ADD TO CART
4	006500400C1	WASHER 45x35.5x2	—	2		NOT AVAILABLE
5	006500401C1	COLLAPSIBLE Spac...	$9.20	1	1	ADD TO CART
6	006500402C1	SHIM 2.50mm	—	AR		NOT AVAILABLE
6	006500403C1	SHIM 2.60 mm	—	AR		NOT AVAILABLE
6	006500404C1	SHIM 2.70mm	—	AR		NOT AVAILABLE
6	006500405C1	SHIM 2.80 mm	—	AR		NOT AVAILABLE
6	006500406C1	SHIM 2.90mm	—	AR		NOT AVAILABLE
6	006500407C1	SHIM 3.00 mm	—	AR		NOT AVAILABLE

MAHINDRA DIRECT PARTS
mahindradirectparts.com

BEVEL GEAR/PINION SET

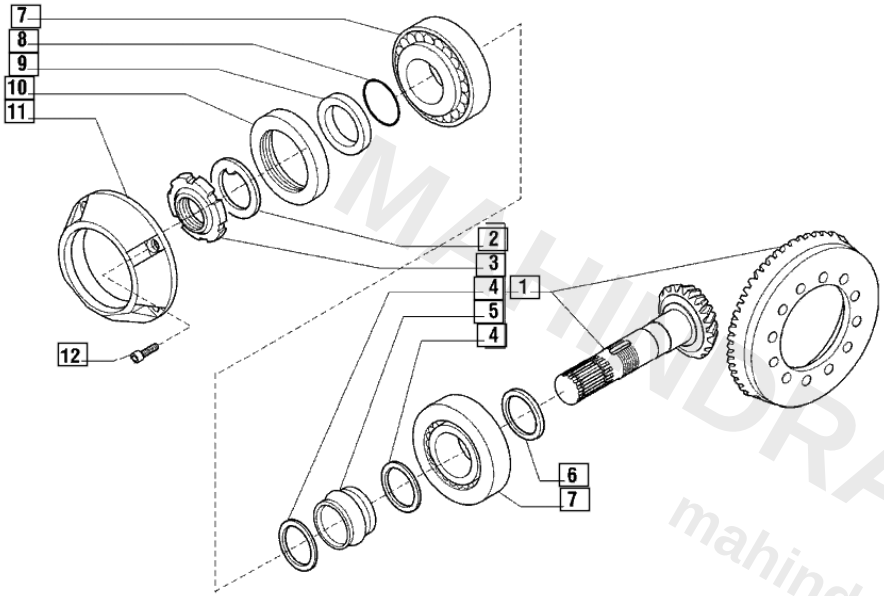

REF NO.	PART #	DESCRIPTION	PRICE	QTY NEEDED	SELECT QTY	ADD TO CART
6	006500408C1	SHIM 3.10mm	—	AR		NOT AVAILABLE
6	006500409C1	SHIM 3.20 mm	—	AR		NOT AVAILABLE
6	006500410C1	SHIM 3.30mm	—	AR		NOT AVAILABLE
6	006500411C1	SHIM 3.40 mm	$42.32	AR	1	ADD TO CART
7	006500412C1	BEARING	$110.40	2	2	ADD TO CART
8	006500413C1	O-RING	$1.25	1	1	ADD TO CART
9	006500415C1	SPACER	$57.50	1	1	ADD TO CART
10	006500416C1	SEAL Ring	$55.66	1	1	ADD TO CART
11	006500417C1	FLANGE	$266.34	1	1	ADD TO CART
12	006500418C1	BOLT M6 x 16	—	4		NOT AVAILABLE

MAHINDRA DIRECT PARTS
mahindradirectparts.com

DIFFERENTIAL

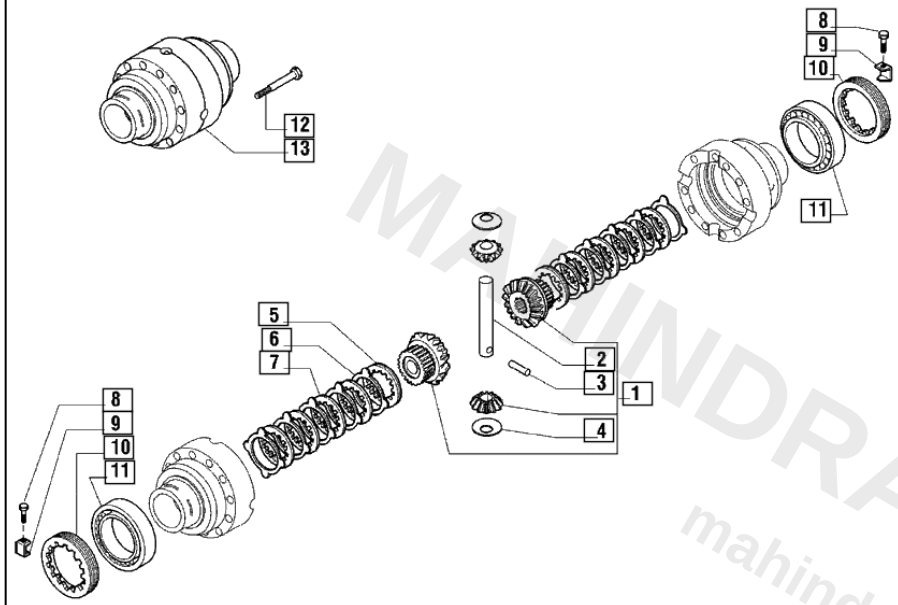

REF NO.	PART #	DESCRIPTION	PRICE	QTY NEEDED	SELECT QTY	ADD TO CART
1	006500419C1	DIFFERENTIAL Kit	$557.52	1	1	ADD TO CART
2	006500420C1	SHAFT	—	1		NOT AVAILABLE
3	006500421C1	PIN D.6x40	—	2		NOT AVAILABLE
4	006500422C1	THRUST Washer	$7.82	2	2	ADD TO CART
5	006500423C1	PLATE	—	2		NOT AVAILABLE
6	006500424C1	DRIVE Plate	$7.36	10	10	ADD TO CART
7	006500425C1	PLATE	—	8		NOT AVAILABLE

MAHINDRA DIRECT PARTS
mahindradirectparts.com

DIFFERENTIAL

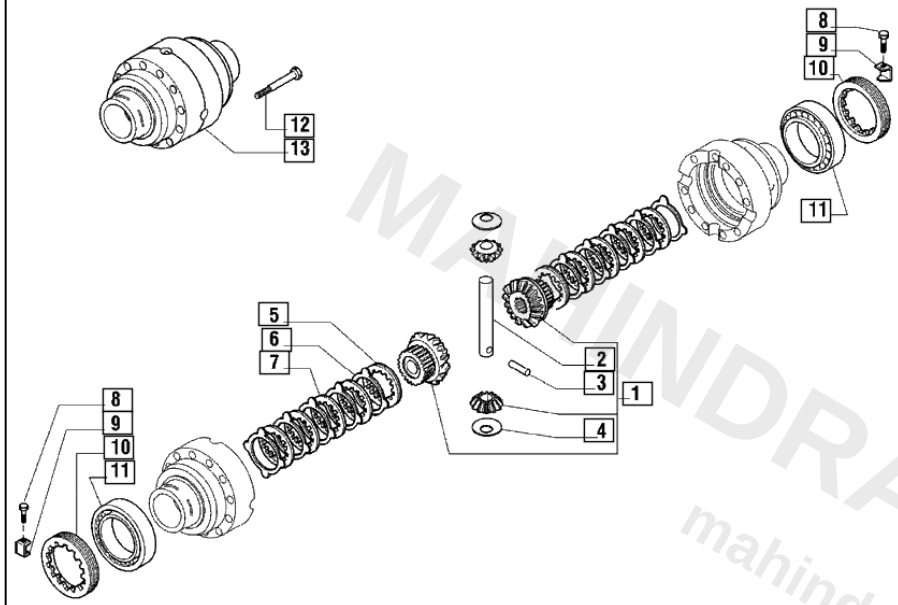

REF NO.	PART #	DESCRIPTION	PRICE	QTY NEEDED	SELECT QTY	ADD TO CART
8	006500426C1	SCREW M6x10 (Self...	—	2		NOT AVAILABLE
9	006500427C1	LOCKING Plate	—	2		NOT AVAILABLE
10	006500428C1	RING Nut	$101.20	2	2	ADD TO CART
11	006500429C1	BEARING	$35.42	2	2	ADD TO CART
12	006500430C1	BOLT M10x1, 5x75	—	12		NOT AVAILABLE
13	006500431C1	DIFFERENTIAL Hou...	—	1		NOT AVAILABLE

MAHINDRA DIRECT PARTS
mahindradirectparts.com

DOUBLE JOINT

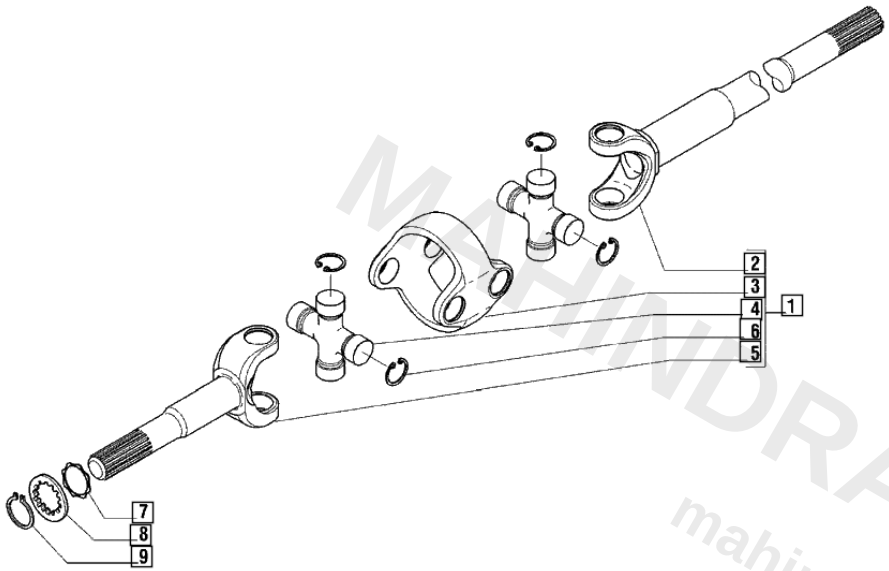

REF NO.	PART #	DESCRIPTION	PRICE	QTY NEEDED	SELECT QTY	ADD TO CART
1	006500432C1	DOUBLE Joint	$1,373.56	2	2	ADD TO CART
2	006500433C1	FORK (Diff, Side) 40...	$1,013.84	2	2	ADD TO CART
3	006500434C1	CENTRAL Body 40871	$137.08	2	2	ADD TO CART
4	006500435C1	SPIDER - 040872	—	4		NOT AVAILABLE
5	006500436C1	FORK (Wheel Hub) 4...	$441.60	2	2	ADD TO CART
6	006500437C1	LOCK Ring - 40875	$1.88	16	16	ADD TO CART
7	006500438C1	THRUST Washer	$8.28	2	2	ADD TO CART
8	006500439C1	THRUST Washer - 1...	$8.28	2	2	ADD TO CART
9	006500440C1	SNAP Ring D45	$1.84	2	2	ADD TO CART

MAHINDRA DIRECT PARTS
mahindradirectparts.com

WHEEL HUB

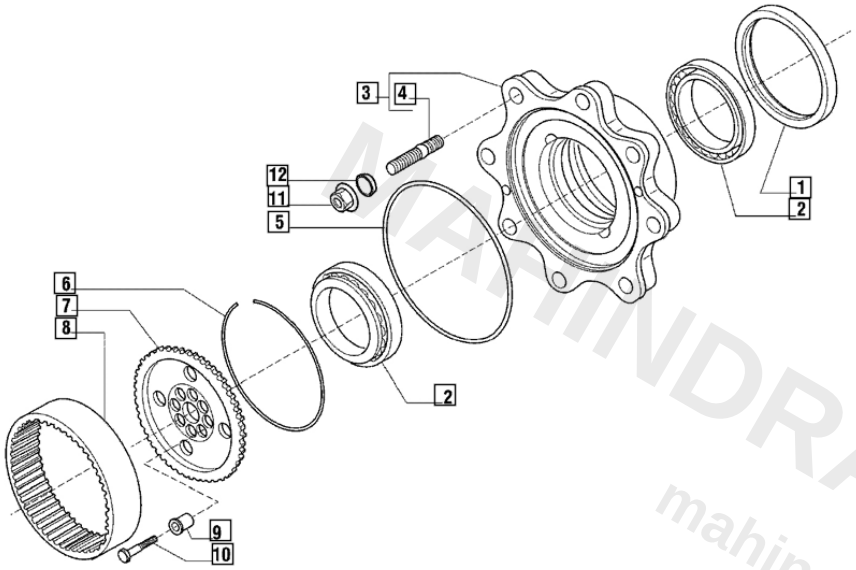

REF NO.	PART #	DESCRIPTION	PRICE	QTY NEEDED	SELECT QTY	ADD TO CART
1	006500442C1	OIL Seal Ring	$120.98	2	2	ADD TO CART
2	006500443C1	BEARING	—	4		NOT AVAILABLE
3	006500444C1	WHEEL Hub Kit	$706.56	2	2	ADD TO CART
4	006500445C1	STUD	$34.96	16	16	ADD TO CART
5	006500446C1	O-RING	$18.40	2	2	ADD TO CART
6	006500447C1	RING	$2.76	2	2	ADD TO CART
7	006500448C1	WHEEL Carrier	$264.96	2	2	ADD TO CART
8	006500449C1	CROWN Gear	$264.96	2	2	ADD TO CART
9	006500450C1	CENTERING Bush	$11.04	12	12	ADD TO CART
10	006500451C1	BOLT M10x45 (Self L...	$2.76	12	12	ADD TO CART
11	006500452C1	NUT M18 x 1.5	$4.60	16	16	ADD TO CART
12	006500453C1	WASHER	$2.30	16	16	ADD TO CART

MAHINDRA DIRECT PARTS
mahindradirectparts.com

HUB REDUCTION

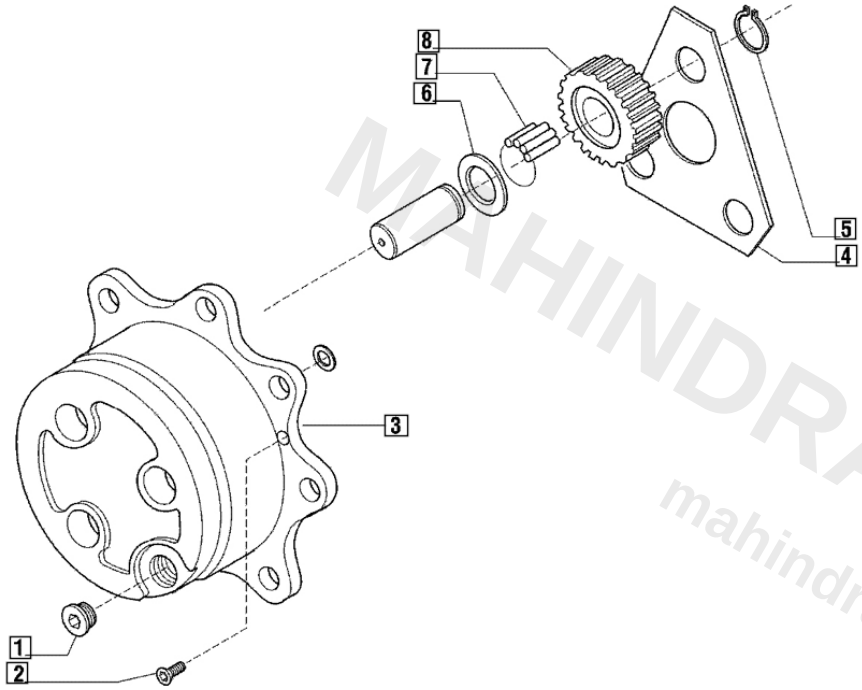

REF NO.	PART #	DESCRIPTION	PRICE	QTY NEEDED	SELECT QTY	ADD TO CART
1	006500454C1	PLUG M30 x 2	$14.26	2	2	ADD TO CART
2	006500455C1	BOLT M8 x 20	$1.88	4	4	ADD TO CART
3	006500456C1	PLANETARY Carrier...	$3,064.52	2	2	ADD TO CART
4	006500457C1	THRUST Washer	$21.62	2	2	ADD TO CART
5	006500458C1	SNAP Ring D.34	$1.88	6	6	ADD TO CART
6	006500459C1	WASHER 55 x 34.6 x...	$3.68	6	6	ADD TO CART
7	006500460C1	NEEDLE Bearing (By...	$3.68	18	18	ADD TO CART
8	006500461C1	GEARZ=23	$247.48	6	6	ADD TO CART

MAHINDRA DIRECT PARTS
mahindradirectparts.com