FRONT AXLE (WITH POWER STEERING BRACKET)

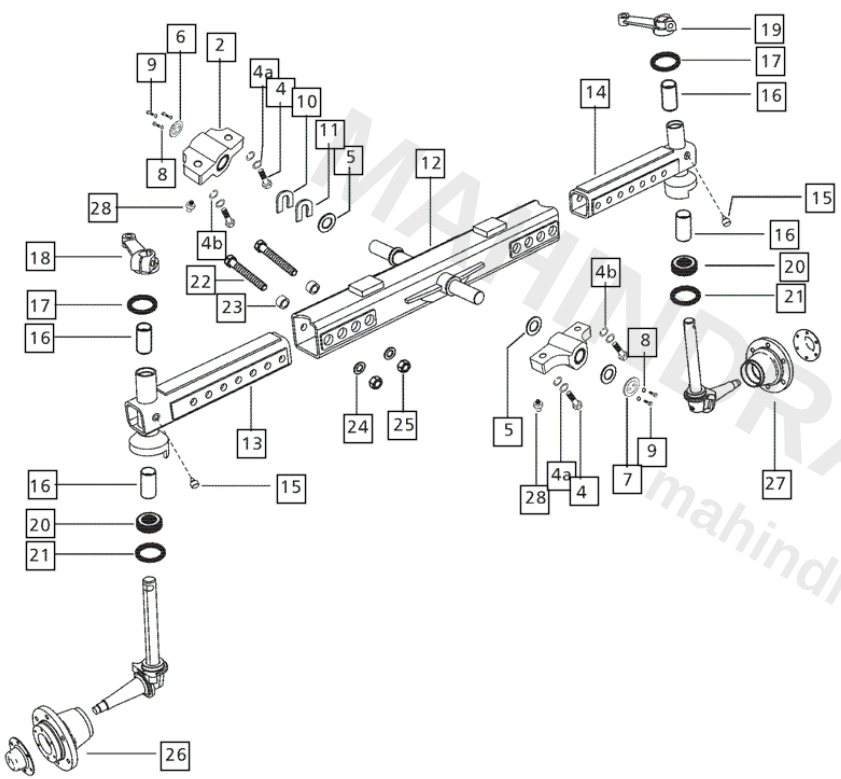

REF NO.	PART #	DESCRIPTION	PRICE	QTY NEEDED	SELECT QTY	ADD TO CART
1	E008001767C91	FRONT Axle Cpte...	—	1		NOT AVAILABLE
2	E007603453C91	PILLOW Block Front	—	1		NOT AVAILABLE
3	E007603454C91	PILLOW Block Rear	$197.80	1	1	ADD TO CART
4	E007602656D1	BOLT Rear Pillow B...	$14.72	4	4	ADD TO CART
5	007602263C1	WASHER Thrust Be...	$8.28	3	3	ADD TO CART
6	008001435C1	CLAMPING Plate R...	—	1		NOT AVAILABLE
7	008001431C1	CLAMPING Plate Fr...	—	1		NOT AVAILABLE
8	TEMP412	WASHER Spring M8	—	5		NOT AVAILABLE
9	TEMP413	BOLT M8 x 1.25 c 3...	—	5		NOT AVAILABLE

MAHINDRA DIRECT PARTS
mahindradirectparts.com

FRONT AXLE (WITH POWER STEERING BRACKET)

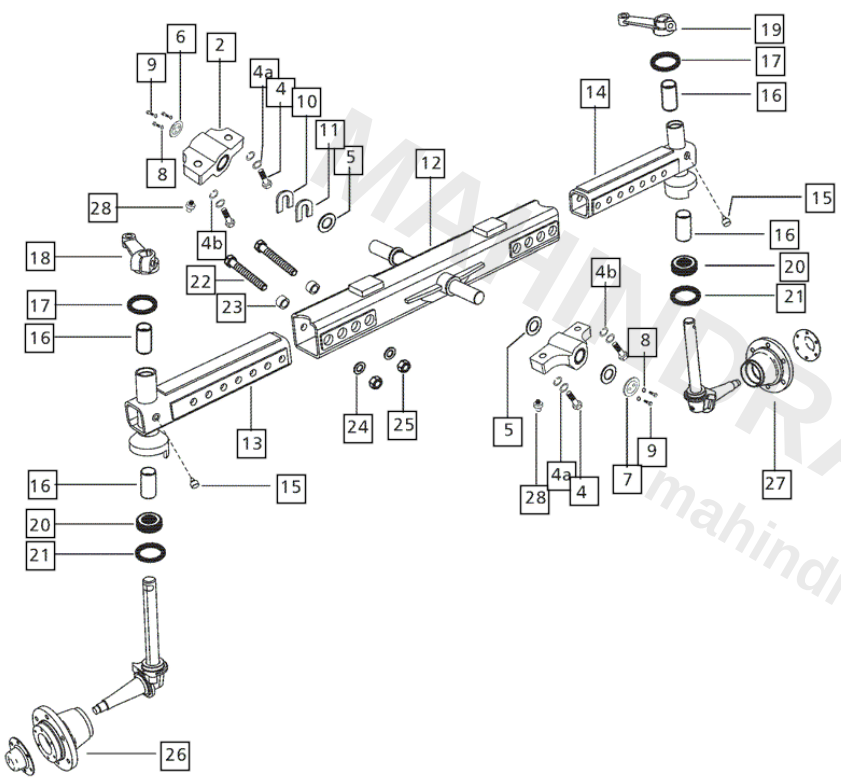

REF NO.	PART #	DESCRIPTION	PRICE	QTY NEEDED	SELECT QTY	ADD TO CART
10	E008002012C1	SHIM 0.4 - U-Type	—	AR		NOT AVAILABLE
11	E008002013C1	SHIM 0.5 - U- Type	—	AR		NOT AVAILABLE
12	008001027C11	BOX Cpte, Front Axl...	—	1		NOT AVAILABLE
13	000041040C08	EXTENSION Cpte,...	$526.70	1	1	ADD TO CART
14	000041039C08	EXTENSION Cpte,...	$496.80	1	1	ADD TO CART
15	005557096R91	RELIEF Valve Asse...	$9.20	2	2	ADD TO CART
16	001233127R1	BUSH Steering Knu...	—	4		NOT AVAILABLE
17	000040312C08	SEAL, Steering Knu...	$34.96	2	2	ADD TO CART
18	007601010C1	KNUCKLE Arm RH	$283.36	1	1	ADD TO CART

MAHINDRA DIRECT PARTS
mahindradirectparts.com

FRONT AXLE (WITH POWER STEERING BRACKET)

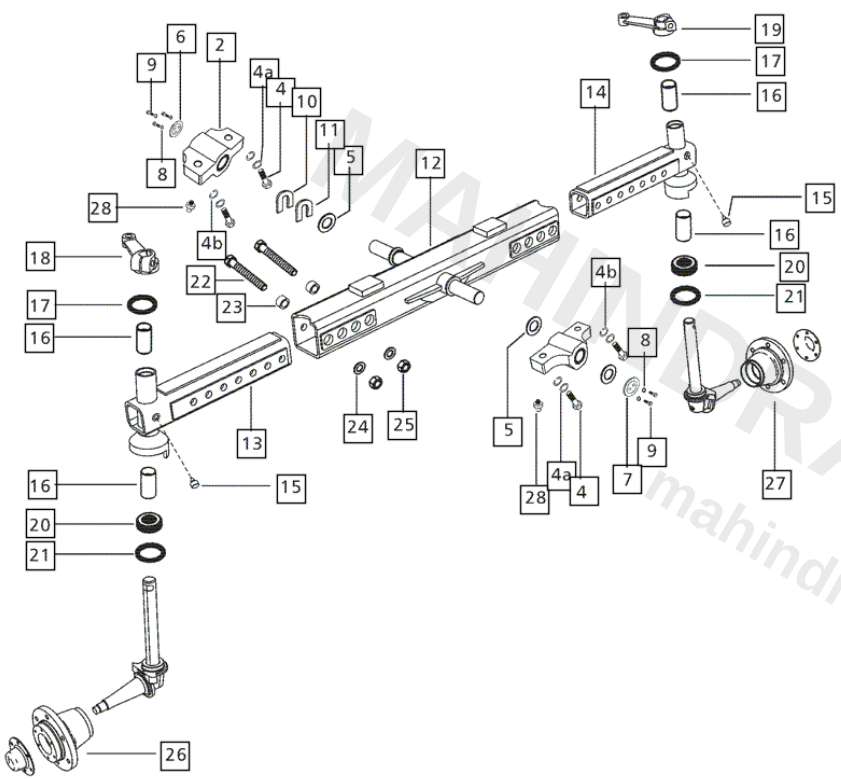

REF NO.	PART #	DESCRIPTION	PRICE	QTY NEEDED	SELECT QTY	ADD TO CART
19	007601011C1	KNUCKLE Arm LH	$283.36	1	1	ADD TO CART
20	001231413R91	BEARING Steering...	$34.76	2	2	ADD TO CART
21	000040313C08	SEAL, Double Wipe...	$33.47	2	2	ADD TO CART
22	000040343C08	BOLT, M20 x 2.5 x...	—	4		NOT AVAILABLE
23	000040344C08	SLEEVE, Bolt Front...	$5.52	4	4	ADD TO CART
24	000040346C08	WASHER M20 Spri...	$1.40	4	4	ADD TO CART
25	000040345C08	NUT M20	$1.35	4	4	ADD TO CART

MAHINDRA DIRECT PARTS
mahindradirectparts.com

FRONT AXLE (WITH POWER STEERING BRACKET)

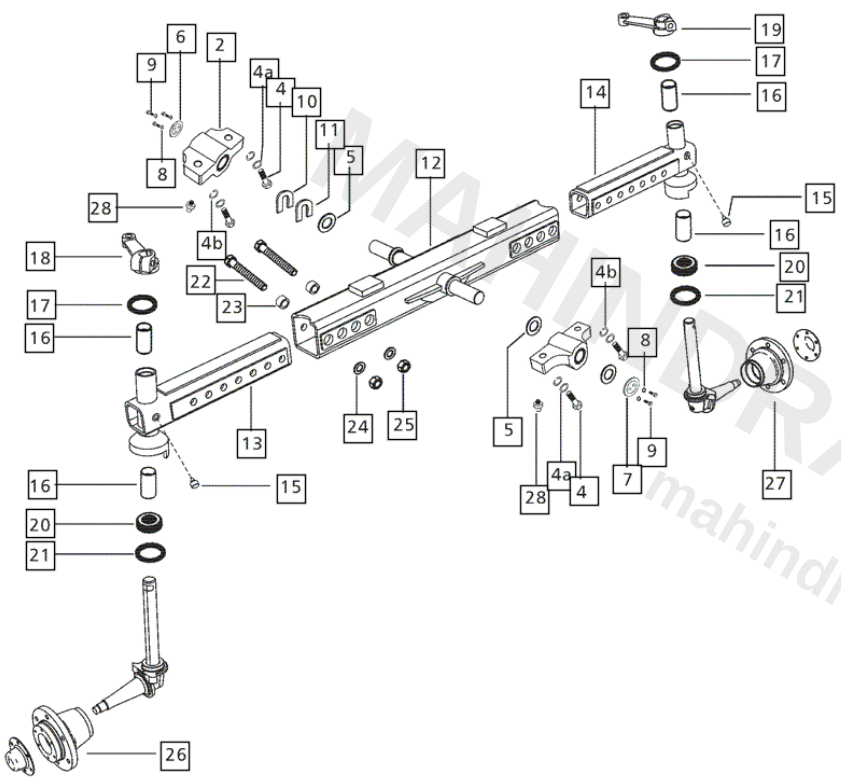

REF NO.	PART #	DESCRIPTION	PRICE	QTY NEEDED	SELECT QTY	ADD TO CART
26	007601234C91	HUB Assembly RH	—	1		NOT AVAILABLE
27	007601233C91	HUB Assembly LH	—	1		NOT AVAILABLE
28	00109462	NIPPLE, Grease 1/8...	$5.52	2	2	ADD TO CART

MAHINDRA DIRECT PARTS
mahindradirectparts.com

FRONT AXLE SUPPORT

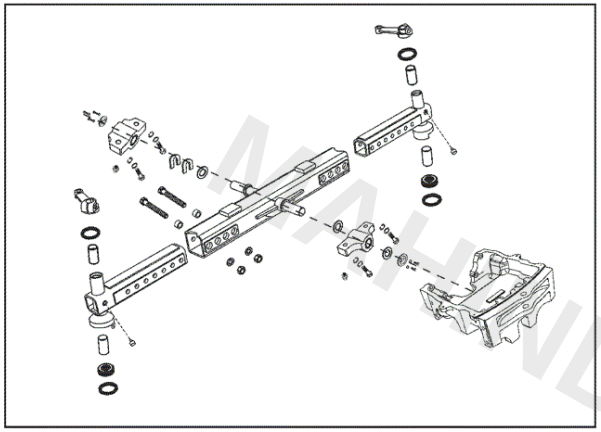

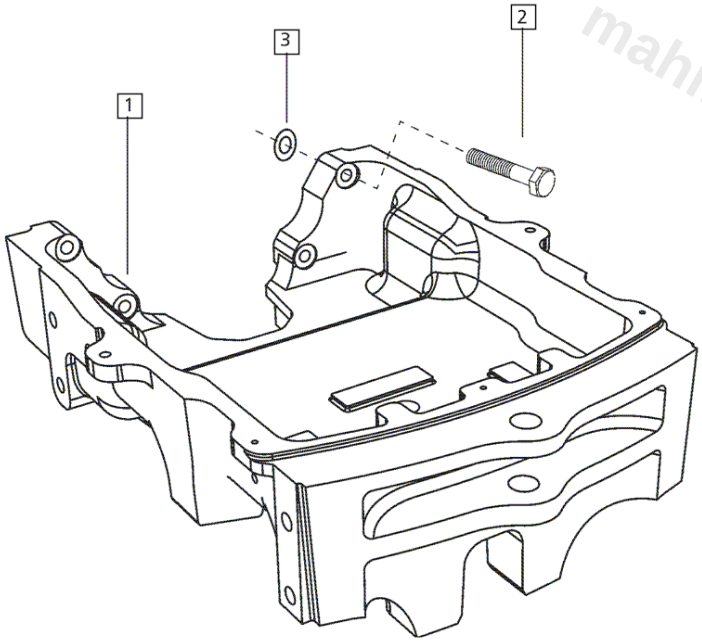

REF NO.	PART #	DESCRIPTION	PRICE	QTY NEEDED	SELECT QTY	ADD TO CART
1	E008001010C1	SUPPORT Front Ax...	$2,553.64	1	1	ADD TO CART
2	000040341C08	BOLT Hex. Head M...	$11.04	6	6	ADD TO CART
3	001082015R2	WASHER 5/8" Sprin...	$0.65	6	6	ADD TO CART

MAHINDRA DIRECT PARTS
mahindradirectparts.com

FRONT WHEEL HUB ASSEMBLY

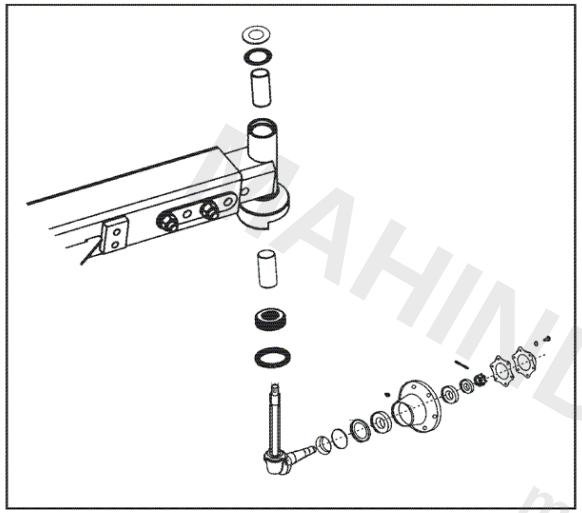

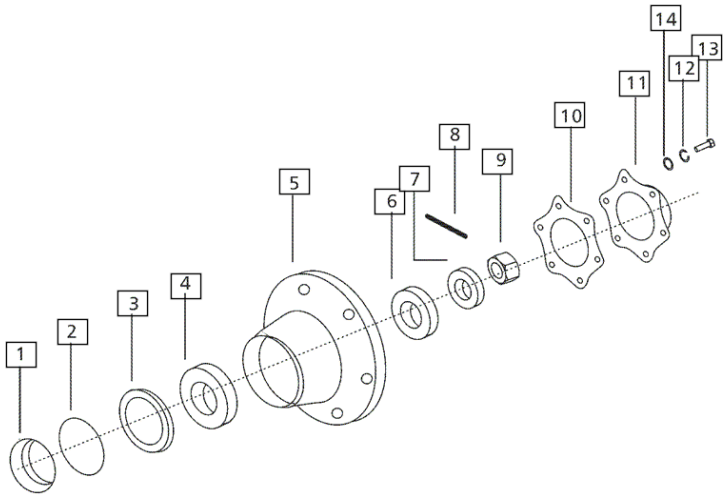

REF NO.	PART #	DESCRIPTION	PRICE	QTY NEEDED	SELECT QTY	ADD TO CART
1	007500063C1	SPACER TIMKEN F...	—	2		NOT AVAILABLE
2	007500084C1	WASHER Felt Front...	$49.68	2	2	ADD TO CART
3	007500085C91	DOUBLE Wiper Fro...	$66.24	2	2	ADD TO CART
4	007500053C91	BEARING Inner Fro...	$75.44	2	2	ADD TO CART
5	007500051C1	HUB Front Wheel	$298.08	2	2	ADD TO CART
6	007500054C91	BEARING Outer Fro...	$32.18	2	2	ADD TO CART
7	007500064C1	WASHER, Outer Be...	$11.04	2	2	ADD TO CART

MAHINDRA DIRECT PARTS
mahindradirectparts.com

FRONT WHEEL HUB ASSEMBLY

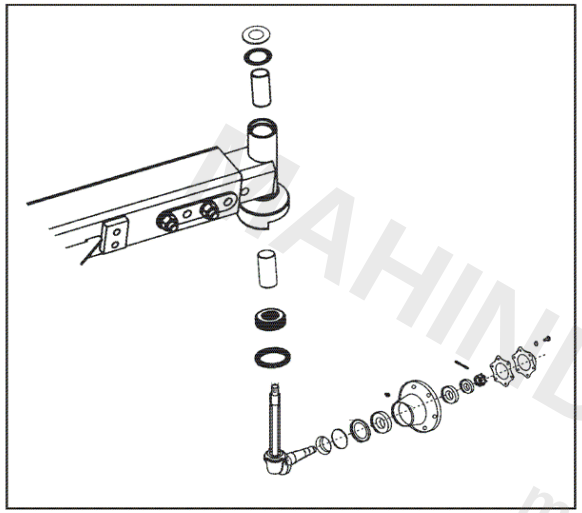

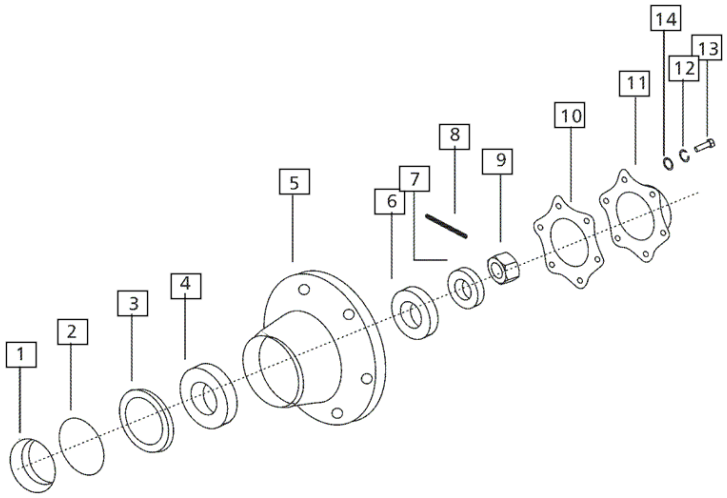

REF NO.	PART #	DESCRIPTION	PRICE	QTY NEEDED	SELECT QTY	ADD TO CART
8	000103386	PIN Cotter	$0.05	2	2	ADD TO CART
9	000040333C08	NUT Slotted	$5.81	2	2	ADD TO CART
10	000040330C08	GASKET Cap Front...	—	2		NOT AVAILABLE
11	000040329C08	CAP Front Wheel Hub	$5.85	2	2	ADD TO CART
12	001233894R1	Washer Spring	—	12		NOT AVAILABLE
13	000041651C08	BOLT M8	—	12		NOT AVAILABLE
14	000061115M01	WASHER Plain 8.5...	$0.49	12	12	ADD TO CART

MAHINDRA DIRECT PARTS
mahindradirectparts.com