FRONT AXLE STEERING

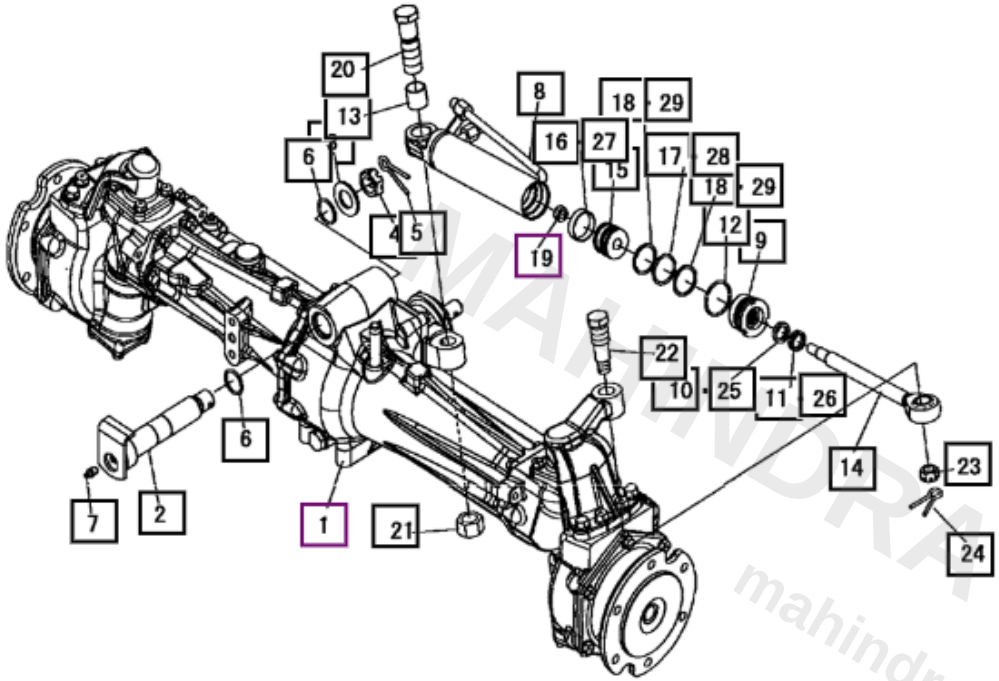

REF NO.	PART #	DESCRIPTION	PRICE	QTY NEEDED	SELECT QTY	ADD TO CART
1	*	F/A Assy	—	1		NOT AVAILABLE
2	19453165AG0	PIN, Center	$505.08	1	1	ADD TO CART
3	11352064000	Plate	$13.34	1	1	ADD TO CART
4	A3130102401	NUT, Slotted	$7.82	1	1	ADD TO CART
5	05200150040	PIN, Split	$1.25	1	1	ADD TO CART
6	08300100290	O-RING	$3.68	2	2	ADD TO CART
7	A6503100300	NIPPLE, Grease	$3.22	1	1	ADD TO CART
8-19	19453171AG0	CYLINDER Assy	$1,999.99	1	1	ADD TO CART
8	19453176AG0	TUBE Assy	$1,041.90	1	1	ADD TO CART

MAHINDRA DIRECT PARTS
mahindradirectparts.com

FRONT AXLE STEERING

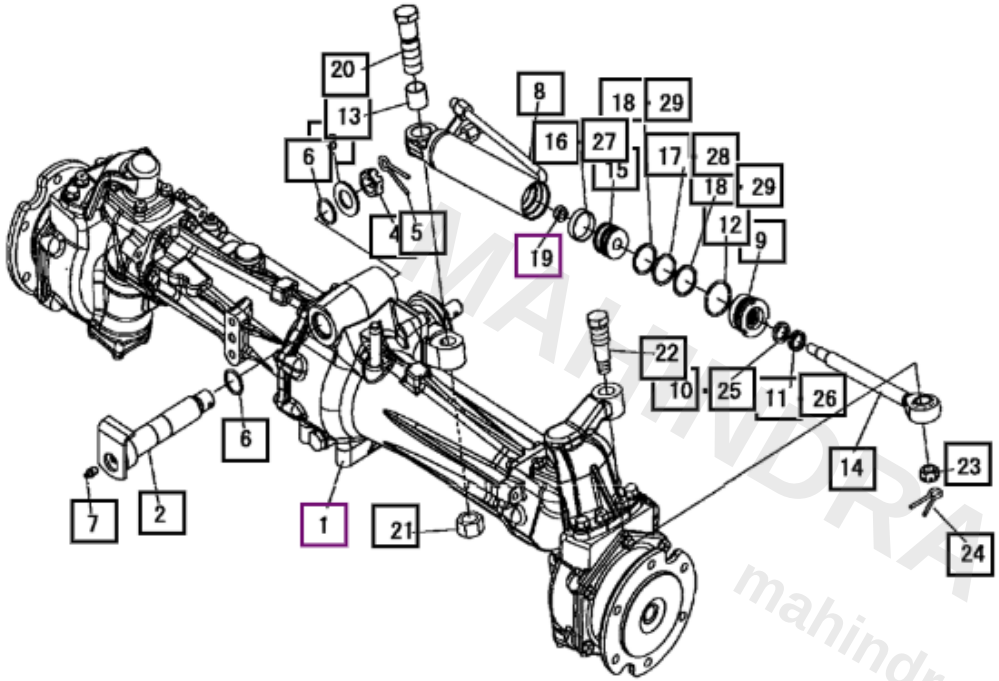

REF NO.	PART #	DESCRIPTION	PRICE	QTY NEEDED	SELECT QTY	ADD TO CART
9	19632211AG0	CASE	$252.08	1	1	ADD TO CART
10	19632212100	SEAL, Rod	$17.02	1	1	ADD TO CART
11	19632212200	SEAL DUST	$17.02	1	1	ADD TO CART
12	08301100400	O-RING	$4.60	1	1	ADD TO CART
13	07963024250	Bushing	$15.64	1	1	ADD TO CART
14	19642207AG0	ROD, Cylinder	$590.18	1	1	ADD TO CART
15	19632208000	PISTON	$102.12	1	1	ADD TO CART
16	19632209100	WEAR, Ring	$85.56	1	1	ADD TO CART
17	08301100340	O-RING	$4.60	1	1	ADD TO CART

MAHINDRA DIRECT PARTS
mahindradirectparts.com

FRONT AXLE STEERING

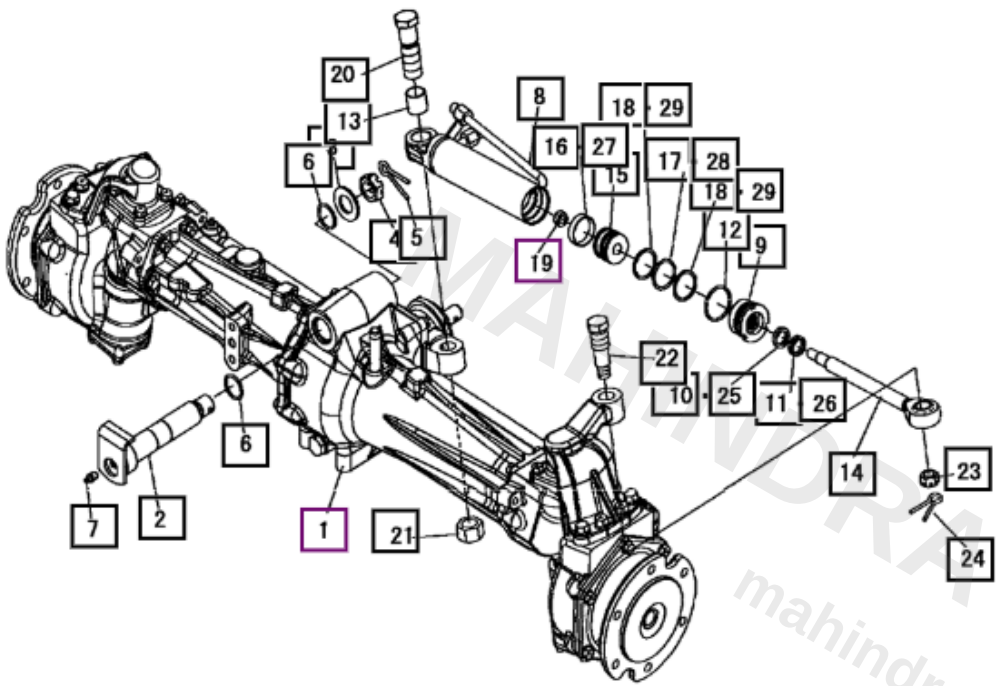

REF NO.	PART #	DESCRIPTION	PRICE	QTY NEEDED	SELECT QTY	ADD TO CART
18	08320100340	RING Back Up	$10.58	2	2	ADD TO CART
19	A3530112000	NUT	—	1		NOT AVAILABLE
20	19632225000	Bolt	$124.66	1	1	ADD TO CART
21	A0730124001	Nut	$9.66	1	1	ADD TO CART
22	19632267000	BOLT	$36.80	1	1	ADD TO CART
23	A3130101601	NUT	$3.22	1	1	ADD TO CART
24	05200140032	PIN, Split	$0.63	1	1	ADD TO CART

MAHINDRA DIRECT PARTS
mahindradirectparts.com

FRONT AXLE STEERING

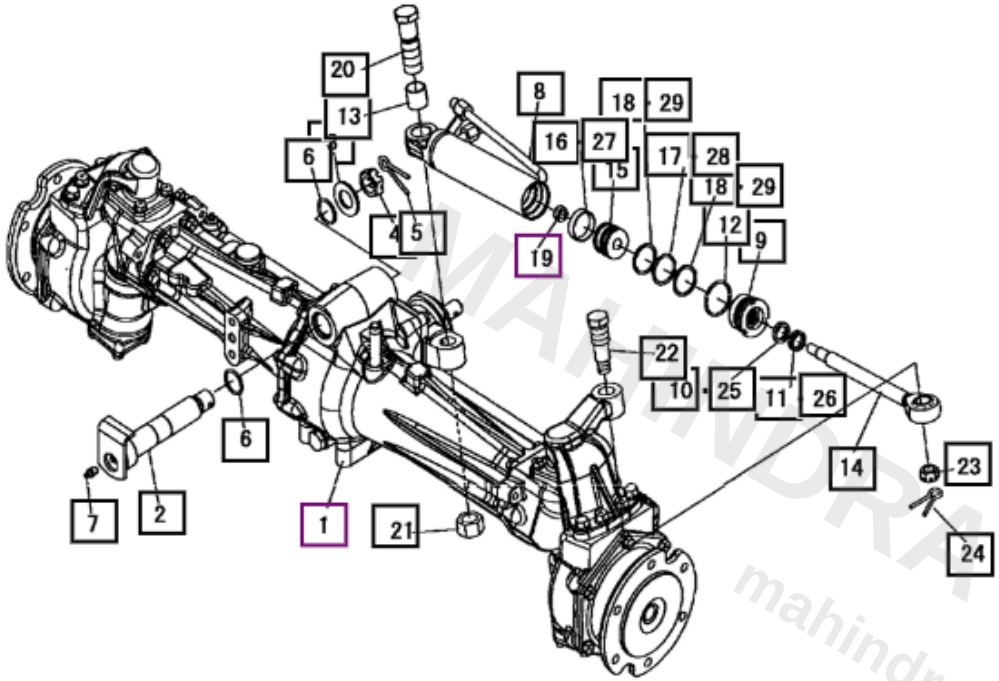

REF NO.	PART #	DESCRIPTION	PRICE	QTY NEEDED	SELECT QTY	ADD TO CART
25,26	19632212000	KIT, Seal B	$40.48	1	1	ADD TO CART
25	19632212100	SEAL, Rod	$17.02	1	1	ADD TO CART
26	19632212200	SEAL DUST	$17.02	1	1	ADD TO CART
27-29	19632209000	KIT, Seal A	$104.88	1	1	ADD TO CART
27	19632209100	WEAR, Ring	$85.56	1	1	ADD TO CART
28	08301100340	O-RING	$4.60	1	1	ADD TO CART
29	08320100340	RING Back Up	$10.58	2	2	ADD TO CART

MAHINDRA DIRECT PARTS
mahindradirectparts.com

FRONT AXLE DIFFERENTIAL AND SHAFT

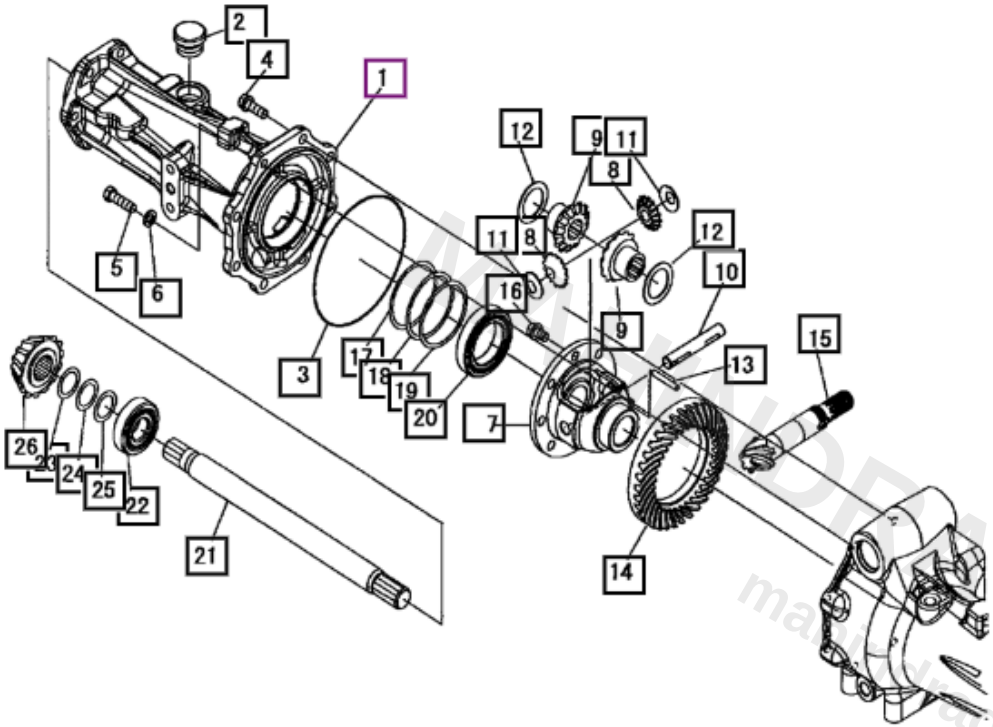

REF NO.	PART #	DESCRIPTION	PRICE	QTY NEEDED	SELECT QTY	ADD TO CART
1	10302119AG2	CASE B, Center	—	1		NOT AVAILABLE
2	11911211000	CAP, Oil	$14.72	1	1	ADD TO CART
3	08300501500	O-RING	$8.28	1	1	ADD TO CART
4	A9420110030	BOLT	$2.30	7	7	ADD TO CART
5	6954264700	BOLT	$8.28	1	1	ADD TO CART
6	A3600101002	WASHER, spring...	$0.63	9	9	ADD TO CART
7-16	19453125000	DIFF Case Assem...	$1,278.99	1	1	ADD TO CART
7	10312121000	CASE, Diff	$516.12	1	1	ADD TO CART
8	10191412000	PINION, Mate	$102.58	2	2	ADD TO CART

MAHINDRA DIRECT PARTS
mahindradirectparts.com

FRONT AXLE DIFFERENTIAL AND SHAFT

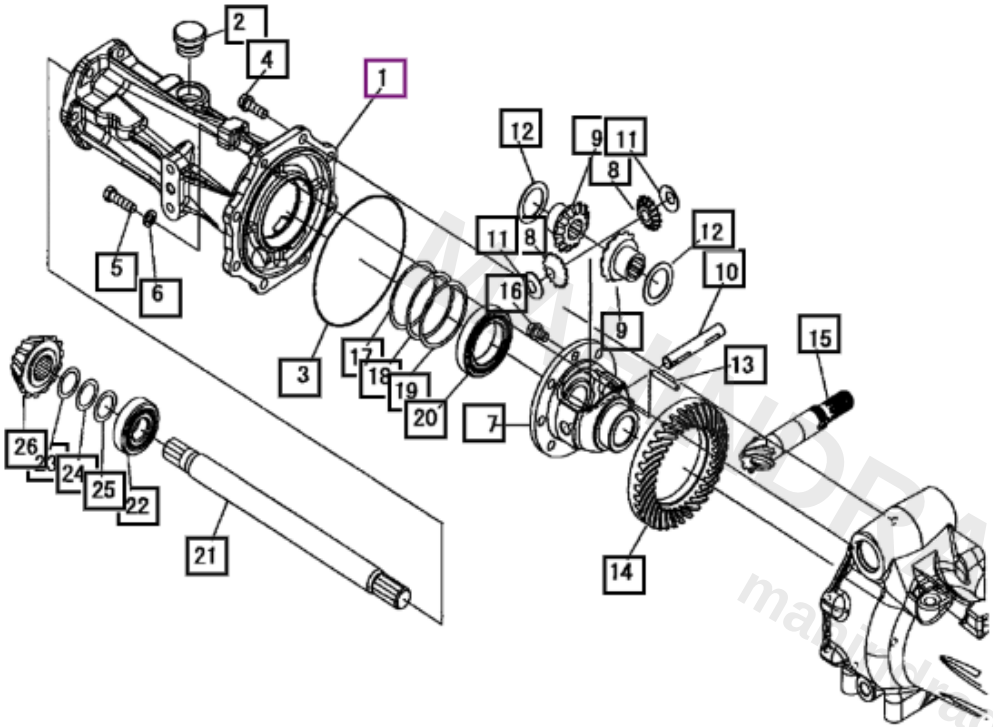

REF NO.	PART #	DESCRIPTION	PRICE	QTY NEEDED	SELECT QTY	ADD TO CART
9	10191413000	GEAR, Side	$182.16	2	2	ADD TO CART
10	10191414000	SHAFT, Pinion	$75.90	1	1	ADD TO CART
11	10191415000	WASHER, Thrust	$11.04	2	2	ADD TO CART
12	10191416000	WASHER, Thrust	$5.98	2	2	ADD TO CART
13	05500006040	SPRING PIN	$2.30	1	1	ADD TO CART
14,15	19453127000	PINION, Gear(6-3...	$1,116.97	1	1	ADD TO CART
14	19562122000	GEAR, Spiral	$812.99	1	1	ADD TO CART
15	19453126000	PINION, Spiral	$374.00	1	1	ADD TO CART
16	12186568000	Bolt	$5.52	8	8	ADD TO CART

MAGNUM DIRECT PARTS
magnumdirectparts.com

FRONT AXLE DIFFERENTIAL AND SHAFT

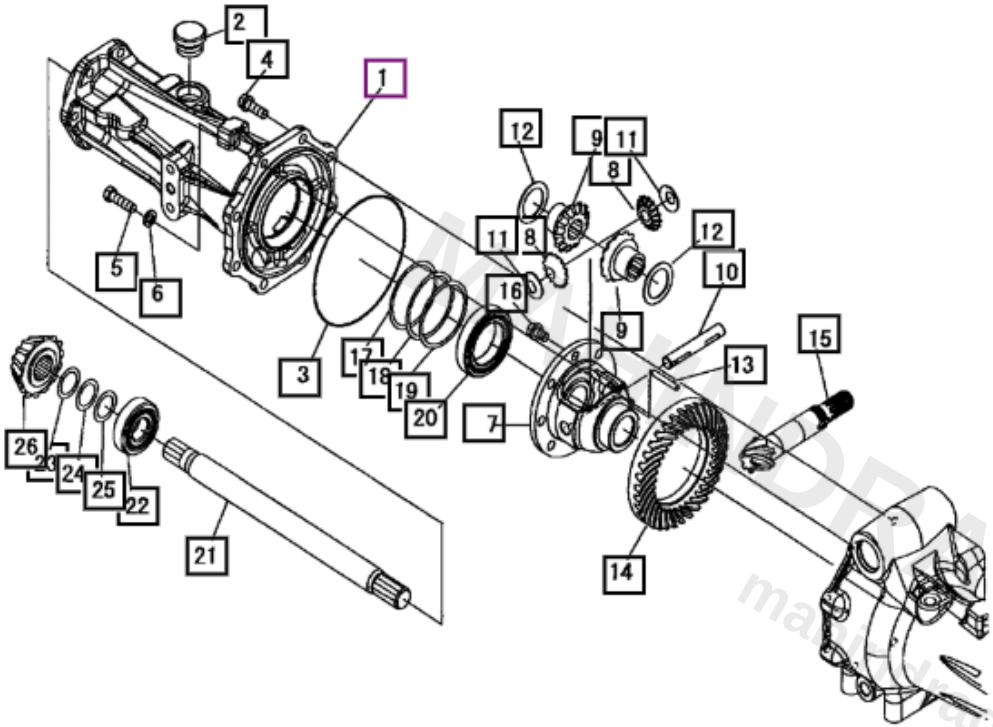

REF NO.	PART #	DESCRIPTION	PRICE	QTY NEEDED	SELECT QTY	ADD TO CART
17-19	10190623000	SHIM Set	$149.04	1	1	ADD TO CART
17	10070618000	LINER T=0.1	$14.72	AR	1	ADD TO CART
18	10070618100	Liner T=0.2	$9.66	AR	1	ADD TO CART
19	10070618200	Liner T=0.4	$9.66	AR	1	ADD TO CART
20	07500060100	BEARING, Ball	$72.13	1	1	ADD TO CART
21	10302128000	SHAFT, Diff	$165.14	1	1	ADD TO CART
22	07500063050	BEARING, Ball	$37.61	1	1	ADD TO CART

MANDRA DIRECT PARTS
mandradirectparts.com

FRONT AXLE DIFFERENTIAL AND SHAFT

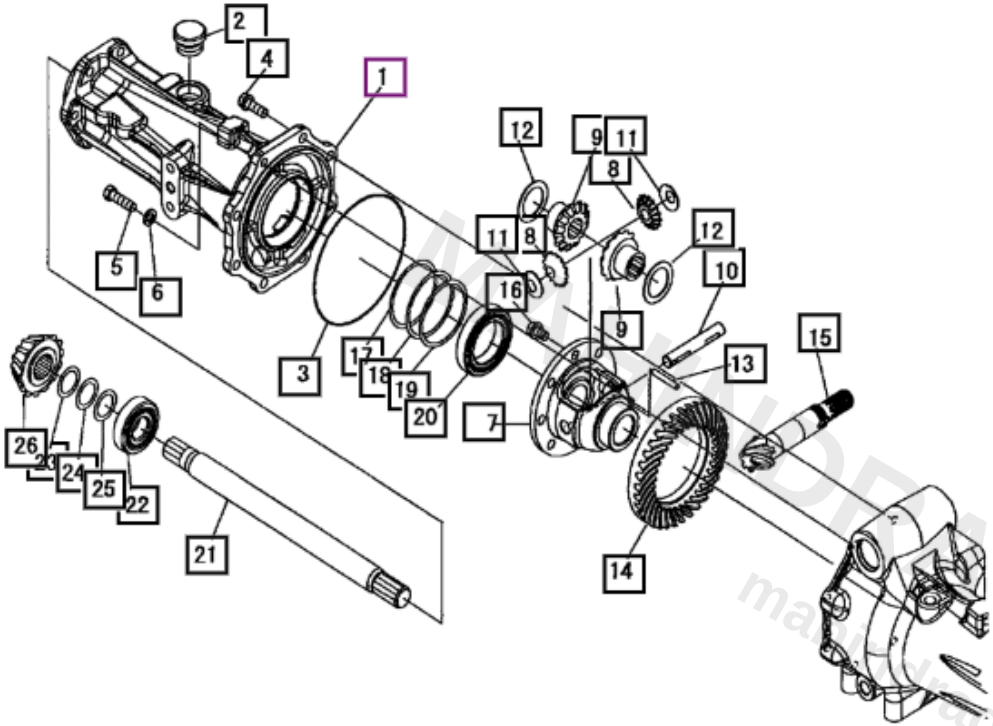

REF NO.	PART #	DESCRIPTION	PRICE	QTY NEEDED	SELECT QTY	ADD TO CART
23-25	10190626000	SHIM Set, Pinion	$34.50	1	1	ADD TO CART
23	11353016000	Liner T=0.1	$5.06	AR	1	ADD TO CART
24	07310002502	Liner T=0.2	$1.88	AR	1	ADD TO CART
25	07310002504	Liner T=0.4	$2.30	AR	1	ADD TO CART
26	19453121000	GEAR 14T	$127.42	1	1	ADD TO CART

MAHINDRA DIRECT PARTS
mahindradirectparts.com

FRONT AXLE HOUSING AND SHAFT

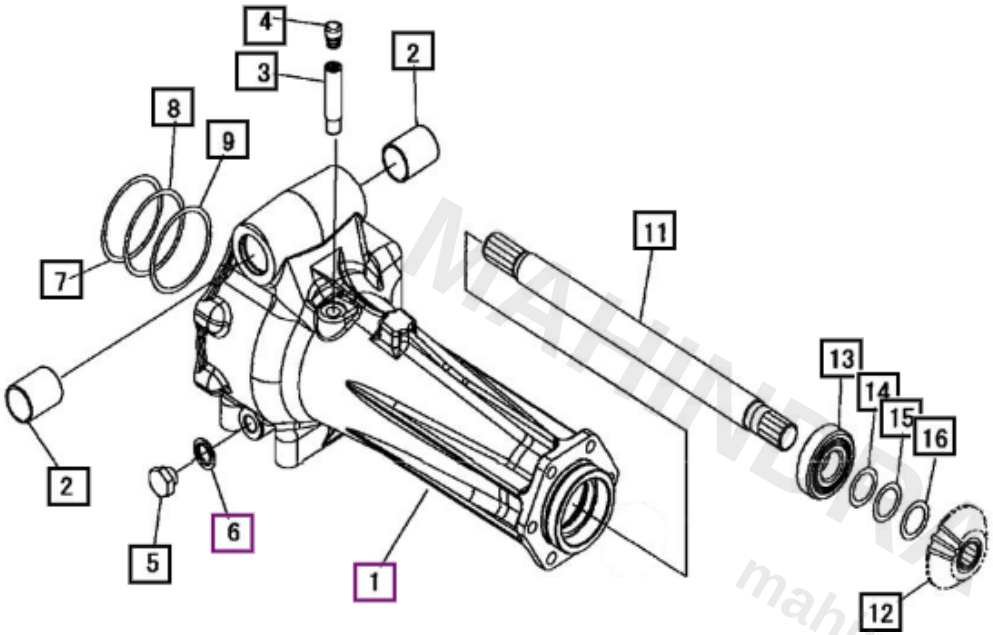

REF NO.	PART #	DESCRIPTION	PRICE	QTY NEEDED	SELECT QTY	ADD TO CART
1,2	19642111002	HOUSING A Assy	$294.66	1	1	ADD TO CART
1	19642112AG2	HOUSING, Axle A	$3,045.38	1	1	ADD TO CART
2	07961030400	BUSHING	$25.76	2	2	ADD TO CART
3	19642117AG0	Pipe	$60.26	1	1	ADD TO CART
4	11190621000	PLUG, Vent	$5.99	1	1	ADD TO CART
5	F500016000	Plug, drain	$12.88	1	1	ADD TO CART
6	08331001600	WASHER, Seal M...	—	1		NOT AVAILABLE
7-9	10190623000	SHIM Set	$149.04	AR	1	ADD TO CART
7	10070618000	LINER T=0.1	$14.72	AR	1	ADD TO CART
8	10070618100	Liner T=0.2	$9.66	AR	1	ADD TO CART

MAHINDRA DIRECT PARTS
mahindradirectparts.com

FRONT AXLE HOUSING AND SHAFT

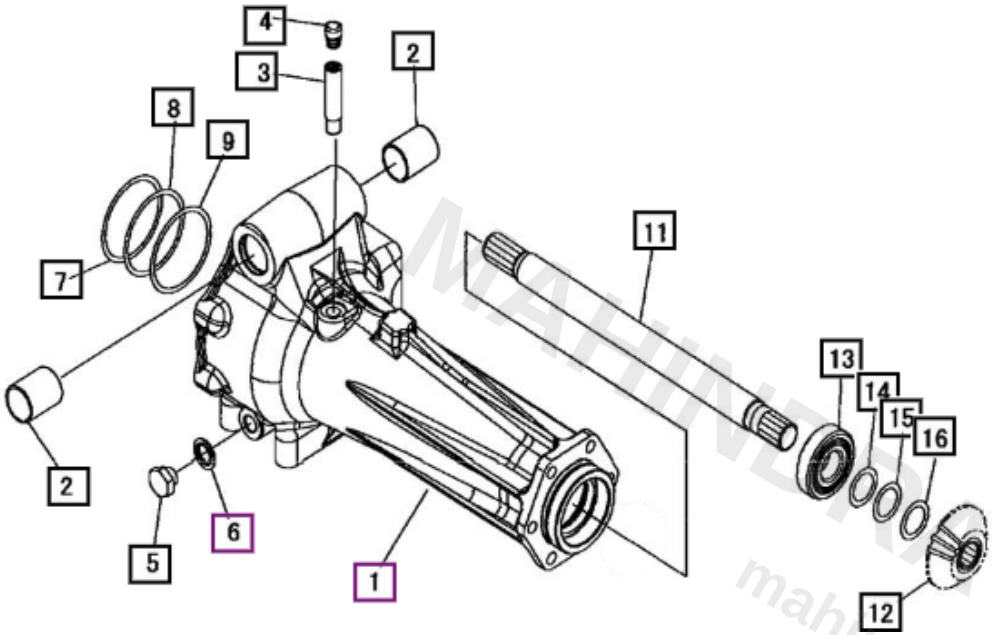

REF NO.	PART #	DESCRIPTION	PRICE	QTY NEEDED	SELECT QTY	ADD TO CART
9	10070618200	Liner T=0.4	$9.66	AR	1	ADD TO CART
10	07500060100	BEARING, Ball	$72.13	1	1	ADD TO CART
11	10302128000	SHAFT, Diff	$165.14	1	1	ADD TO CART
12	19453121000	GEAR 14T	$127.42	1	1	ADD TO CART
13	07500063050	BEARING, Ball	$37.61	1	1	ADD TO CART
14-16	10190626000	SHIM Set, Pinion	$34.50	AR	1	ADD TO CART
14	11353016000	Liner T=0.1	$5.06	AR	1	ADD TO CART
15	07310002502	Liner T=0.2	$1.88	AR	1	ADD TO CART
16	07310002504	Liner T=0.4	$2.30	AR	1	ADD TO CART

MAHINDRA DIRECT PARTS
mahindradirectparts.com

FRONT AXLE INPUT

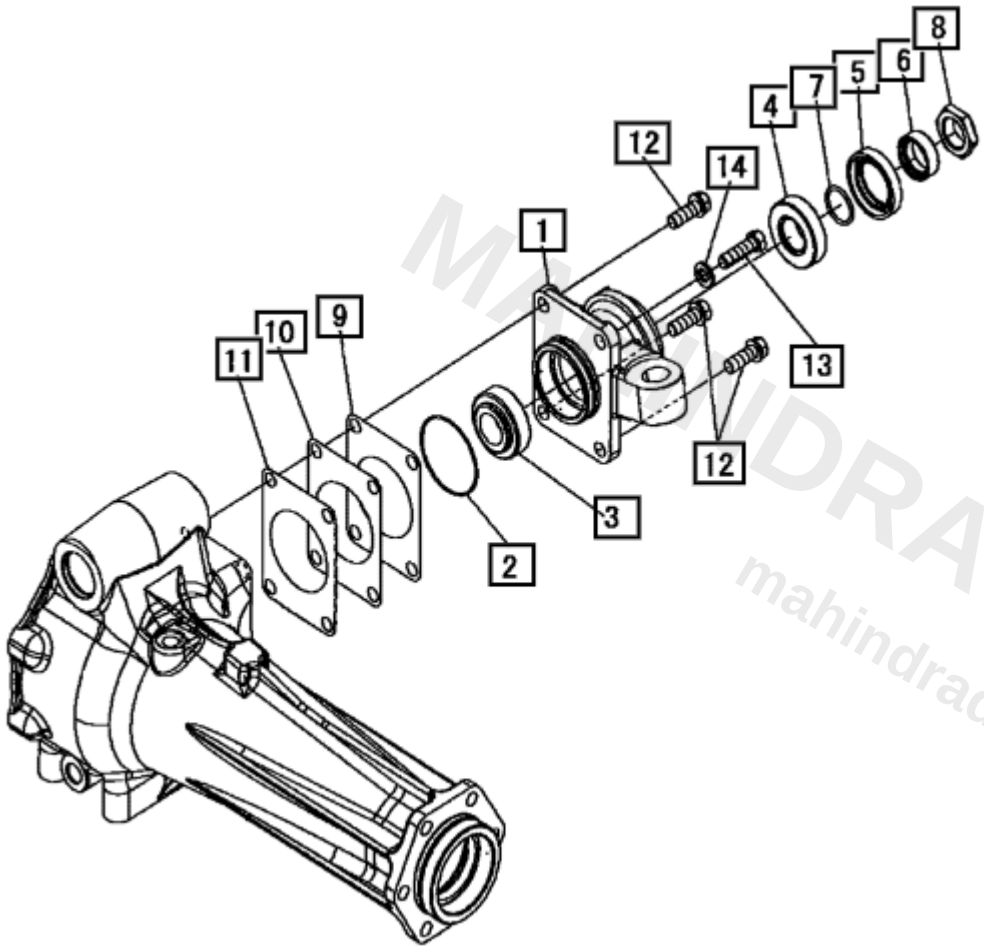

REF NO.	PART #	DESCRIPTION	PRICE	QTY NEEDED	SELECT QTY	ADD TO CART
1	19642116AG0	CASE, Pinion	$334.42	1	1	ADD TO CART
2	08300500600	O-RING Dia. 60	$5.06	1	1	ADD TO CART
3	10212141000	BEARING, Taper...	$83.26	1	1	ADD TO CART
4	07700130205	BEARING, Taper...	$41.22	1	1	ADD TO CART
5	08401035529	SEAL, Oil TC35529	$20.24	1	1	ADD TO CART
6	10212171000	Bushing	$117.30	1	1	ADD TO CART
7	08300200250	O-Ring	$2.76	1	1	ADD TO CART
8	10302123000	NUT M25	$40.48	1	1	ADD TO CART

MAHINDRA DIRECT PARTS
mahindradirectparts.com

FRONT AXLE INPUT

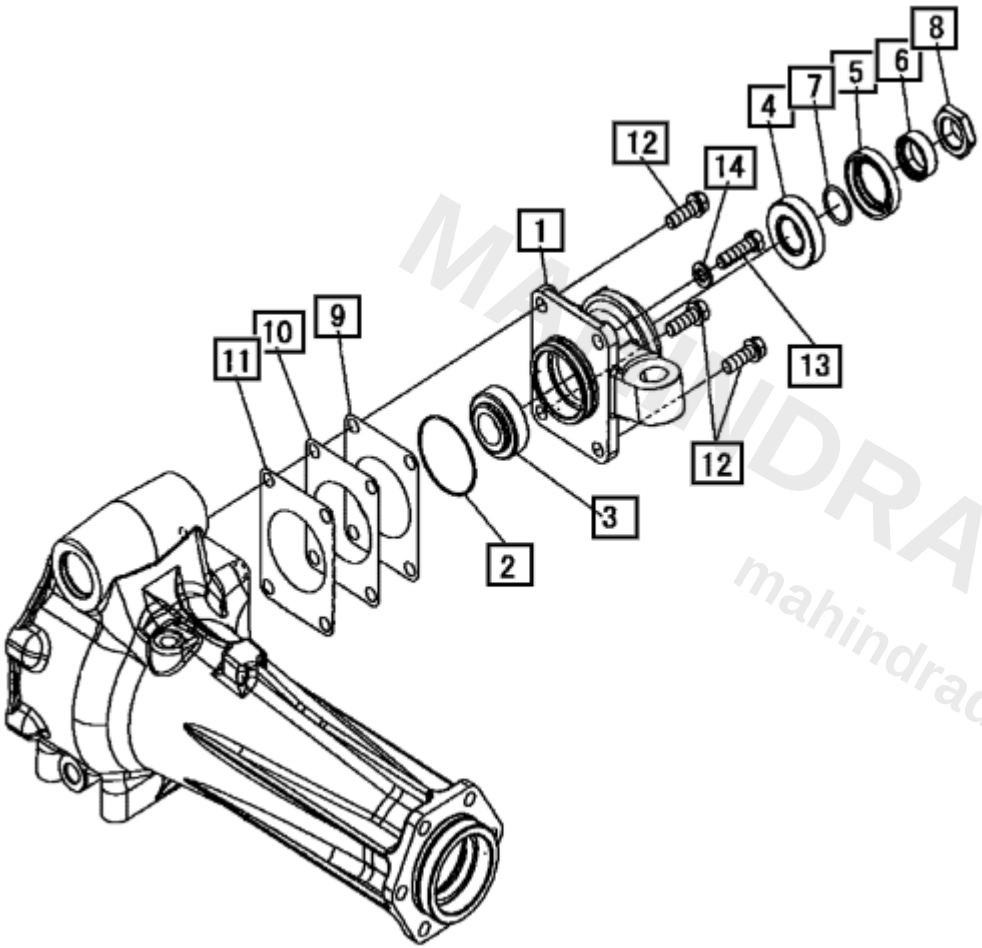

REF NO.	PART #	DESCRIPTION	PRICE	QTY NEEDED	SELECT QTY	ADD TO CART
9-11	19642120000	SHIM Set	$125.58	AR	1	ADD TO CART
9	10232136001	SHIM	$16.10	AR	1	ADD TO CART
10	10232137001	SHIM	$33.12	AR	1	ADD TO CART
11	10232138001	SHIM	$13.80	AR	1	ADD TO CART
12	F1550110030	BOLT, W/Washer...	$1.88	3	3	ADD TO CART
13	6954264700	BOLT	$8.28	1	1	ADD TO CART
14	A3600101002	WASHER, spring...	$0.63	1	1	ADD TO CART

MAHINDRA DIRECT PARTS
mahindradirectparts.com

FRONT AXLE HUB

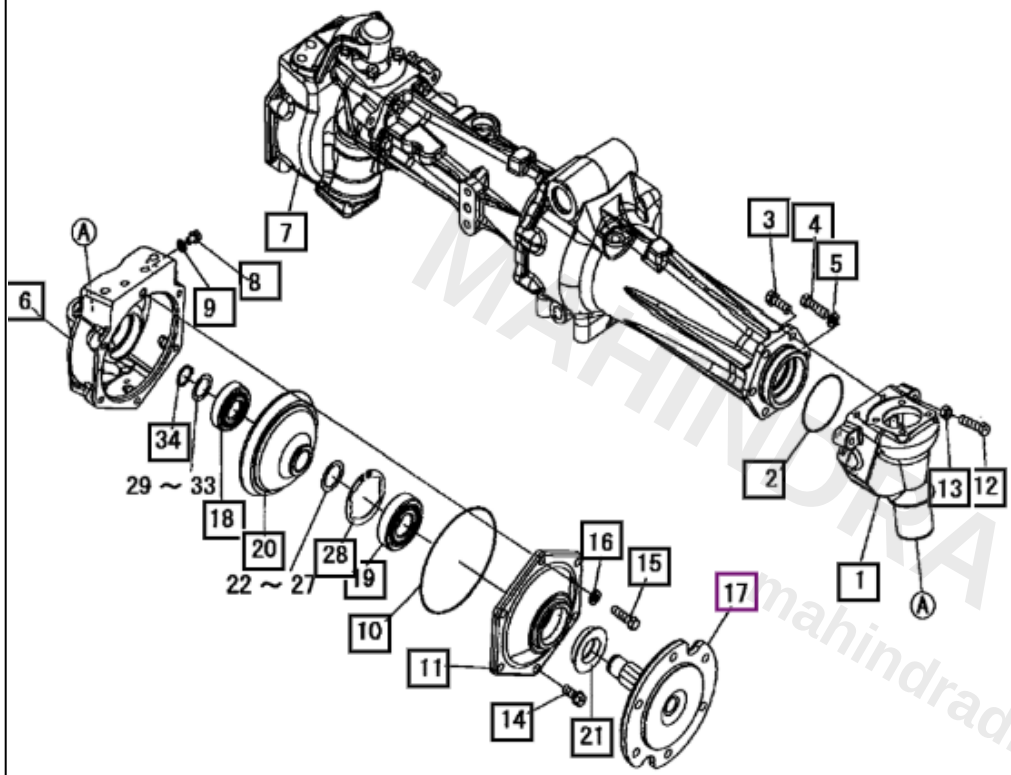

REF NO.	PART #	DESCRIPTION	PRICE	QTY NEEDED	SELECT QTY	ADD TO CART
1	10302136AG0	CASE, King Pin	$561.66	2	2	ADD TO CART
2	08300500750	O-RING	$6.44	2	2	ADD TO CART
3	A9420110030	BOLT	$2.30	10	10	ADD TO CART
4	6954264700	BOLT	$8.28	2	2	ADD TO CART
5	A3600101002	WASHER, spring...	$0.63	12	12	ADD TO CART
6	19642121AG0	CASE L.H, Final	$1,489.02	1	1	ADD TO CART
7	19642122AG0	CASE, Final R.H.	$1,489.02	1	1	ADD TO CART
8	27403214200	PLUG	$1.88	2	2	ADD TO CART
9	08331000800	WASHER, Seal M8	$1.84	2	2	ADD TO CART

MAHINDRA DIRECT PARTS
mahindradirectparts.com

FRONT AXLE HUB

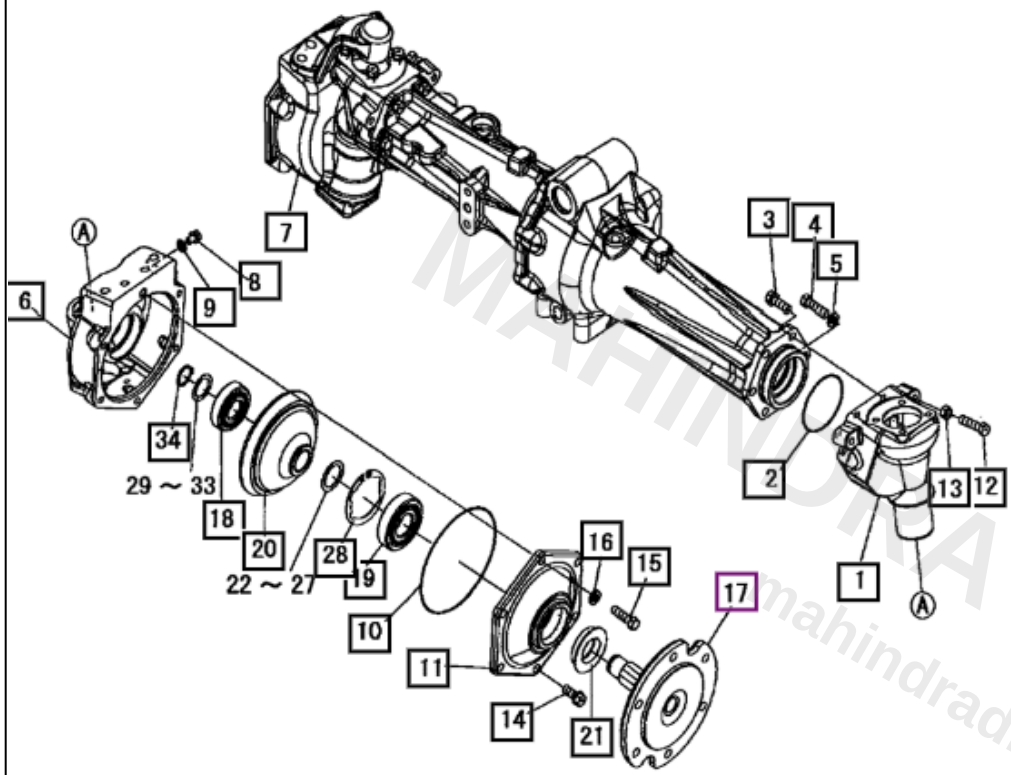

REF NO.	PART #	DESCRIPTION	PRICE	QTY NEEDED	SELECT QTY	ADD TO CART
10	08300501450	O-Ring	$7.36	2	2	ADD TO CART
11	10212119AG0	Cover	$349.14	2	2	ADD TO CART
12	A0520110040	BOLT, 7T	$4.14	2	2	ADD TO CART
13	A3030110002	Nut	$0.70	2	2	ADD TO CART
14	F1550110025	BOLT, W/Washer...	$1.88	10	10	ADD TO CART
15	6954264700	BOLT	$8.28	2	2	ADD TO CART
16	A3600101002	WASHER, spring...	$0.63	2	2	ADD TO CART
17	10402121000	SHAFT	$980.72	2	2	ADD TO CART
18	07500063050	BEARING, Ball	$37.61	2	2	ADD TO CART

MAHINDRA DIRECT PARTS
mahindradirectparts.com

FRONT AXLE HUB

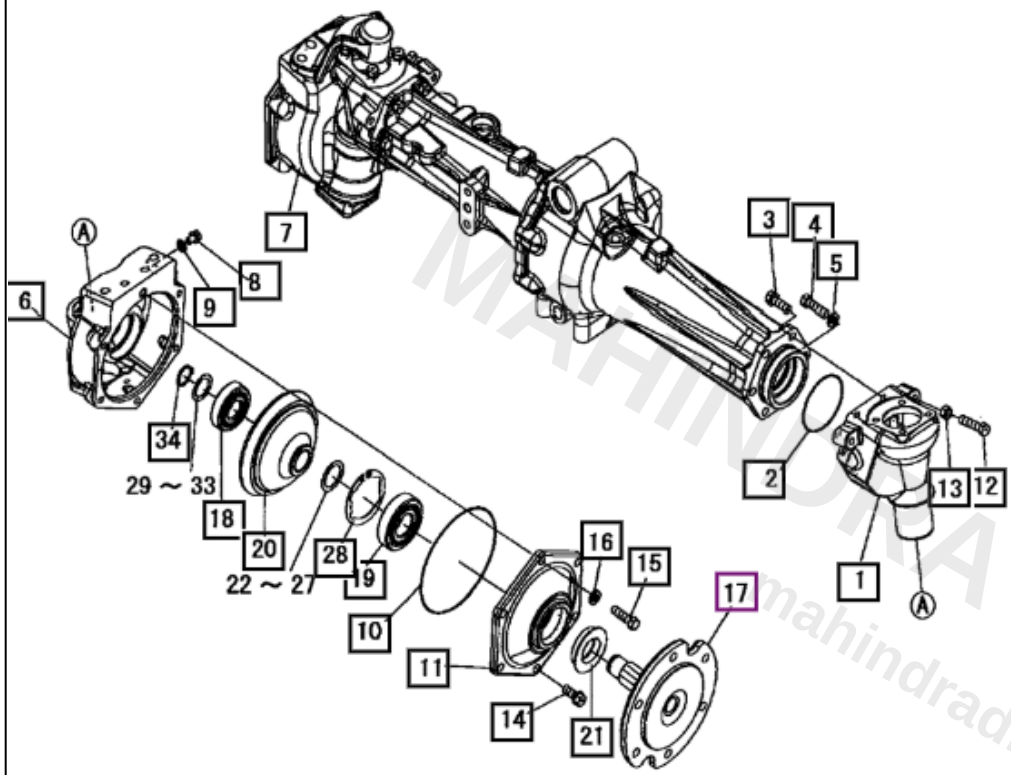

REF NO.	PART #	DESCRIPTION	PRICE	QTY NEEDED	SELECT QTY	ADD TO CART
19	07500063060	BEARING, Ball N...	$48.94	2	2	ADD TO CART
20	19562143000	GEAR, Gear 32T	$744.74	2	2	ADD TO CART
21	08412355212	SEAL, Oil	$30.54	2	2	ADD TO CART
22-26	10212159000	SHIM Set	$30.36	AR	1	ADD TO CART
22	07310003001	Liner T=0.15	$2.30	AR	1	ADD TO CART
23	07310003004	Liner T=0.4	$1.88	AR	1	ADD TO CART
24	07310003008	Liner	$1.88	AR	1	ADD TO CART

MAHINDRA DIRECT PARTS
mahindradirectparts.com

FRONT AXLE HUB

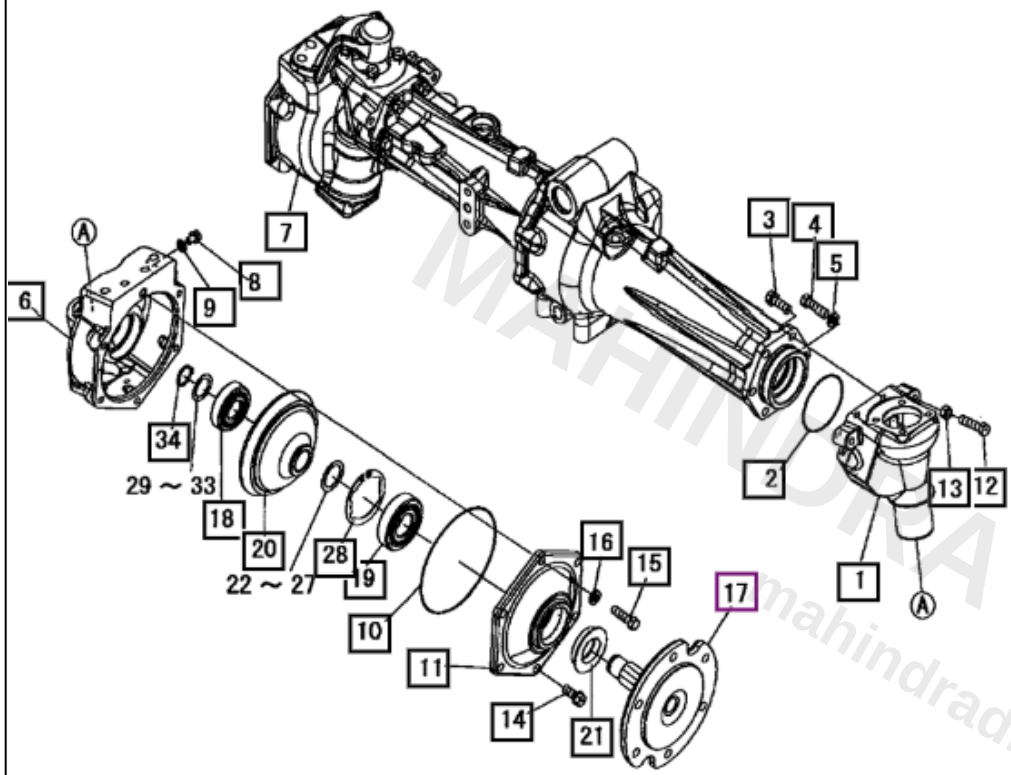

REF NO.	PART #	DESCRIPTION	PRICE	QTY NEEDED	SELECT QTY	ADD TO CART
25	07310003010	LINER	$2.30	AR	1	ADD TO CART
26	07310003012	Liner	$2.76	AR	1	ADD TO CART
27	07310003002	Liner T=0.2	$1.88	AR	1	ADD TO CART
28	07410007201	C-RING Dia. 72	$5.06	2	2	ADD TO CART
29-33	10212158000	SHIM Set	$56.58	AR	1	ADD TO CART
29	11353016000	Liner T=0.1	$5.06	AR	1	ADD TO CART
30	07310002504	Liner T=0.4	$2.30	AR	1	ADD TO CART
31	07310002508	LINER	$2.76	AR	1	ADD TO CART
32	07310102510	Liner	$1.88	AR	1	ADD TO CART
33	07310002512	Liner	$2.76	AR	1	ADD TO CART
34	07400002500	C-RING	$1.88	2	2	ADD TO CART

MAHINDRA DIRECT PARTS
mahindradirectparts.com

FRONT AXLE KNUCKLE

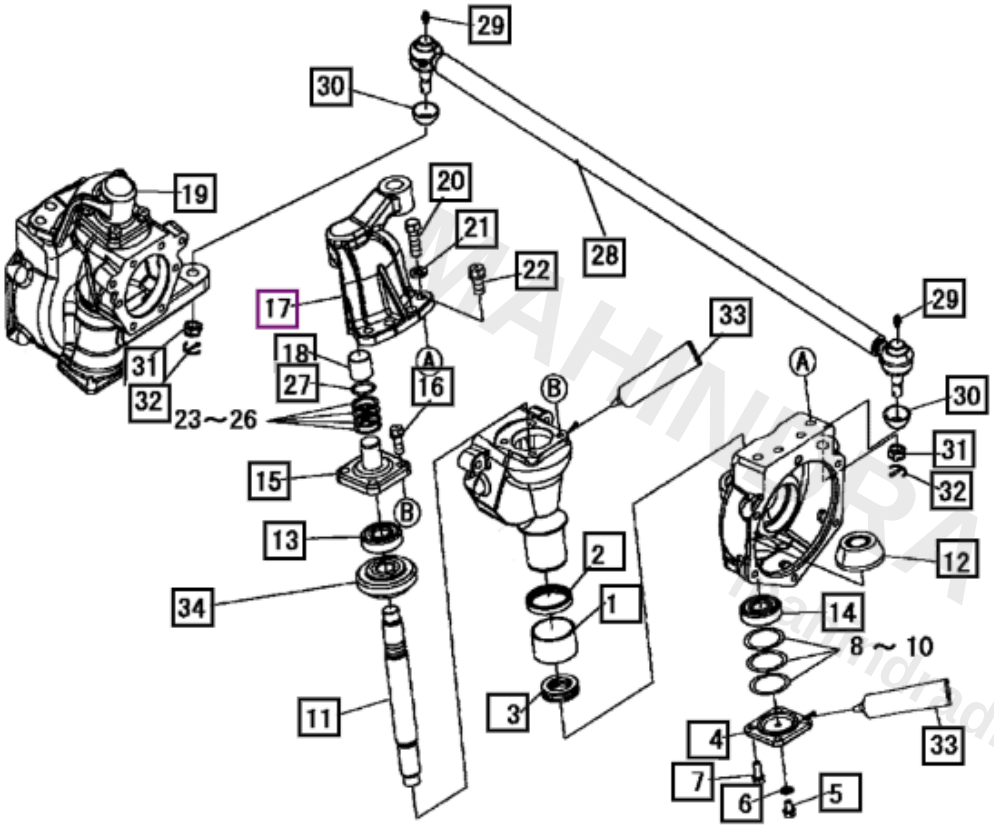

REF NO.	PART #	DESCRIPTION	PRICE	QTY NEEDED	SELECT QTY	ADD TO CART
1	07961050300	Bushing	$51.00	2	2	ADD TO CART
2	6954265100	SEAL, Oil	$38.18	2	2	ADD TO CART
3	07600051106	BEARING, Thrust...	$38.64	2	2	ADD TO CART
4	10070638AG1	COVER	$132.48	2	2	ADD TO CART
5	27403214200	PLUG	$1.88	2	2	ADD TO CART
6	08331000800	WASHER, Seal M8	$1.84	2	2	ADD TO CART
7	F1540108020	BOLT, W/Washer...	$1.25	8	8	ADD TO CART
8-10	19632139000	SHIM Set	$36.34	AR	1	ADD TO CART
8	07300005201	LINER	$1.84	AR	1	ADD TO CART

MAHINDRA DIRECT PARTS
mahindradirectparts.com

FRONT AXLE KNUCKLE

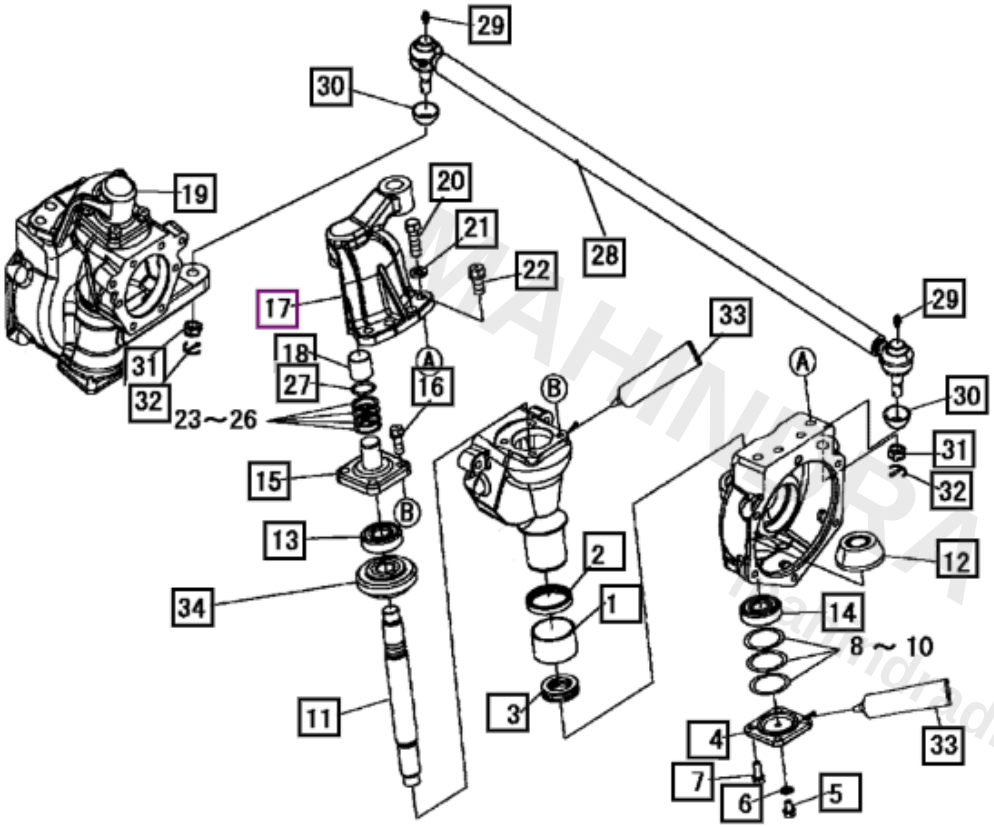

REF NO.	PART #	DESCRIPTION	PRICE	QTY NEEDED	SELECT QTY	ADD TO CART
9	07300005202	Liner T=0.2	$1.84	AR	1	ADD TO CART
10	07300005203	LINER	$1.84	AR	1	ADD TO CART
11	19642124001	SHAFT	$257.14	2	2	ADD TO CART
12	19562142000	GEAR, 12T	$144.44	2	2	ADD TO CART
13	07500563044	BEARING, Ball N...	$39.16	2	2	ADD TO CART
14	07500263040	BEARING, Ball	$20.70	2	2	ADD TO CART
15	10212120AG0	Holder	$172.96	2	2	ADD TO CART
16	F1550110025	BOLT, W/Washer...	$1.88	8	8	ADD TO CART
17	19642126AG0	KNUCKLE ARM LH	$353.74	1	1	ADD TO CART

MAHINDRA DIRECT PARTS
mahindradirectparts.com

FRONT AXLE KNUCKLE

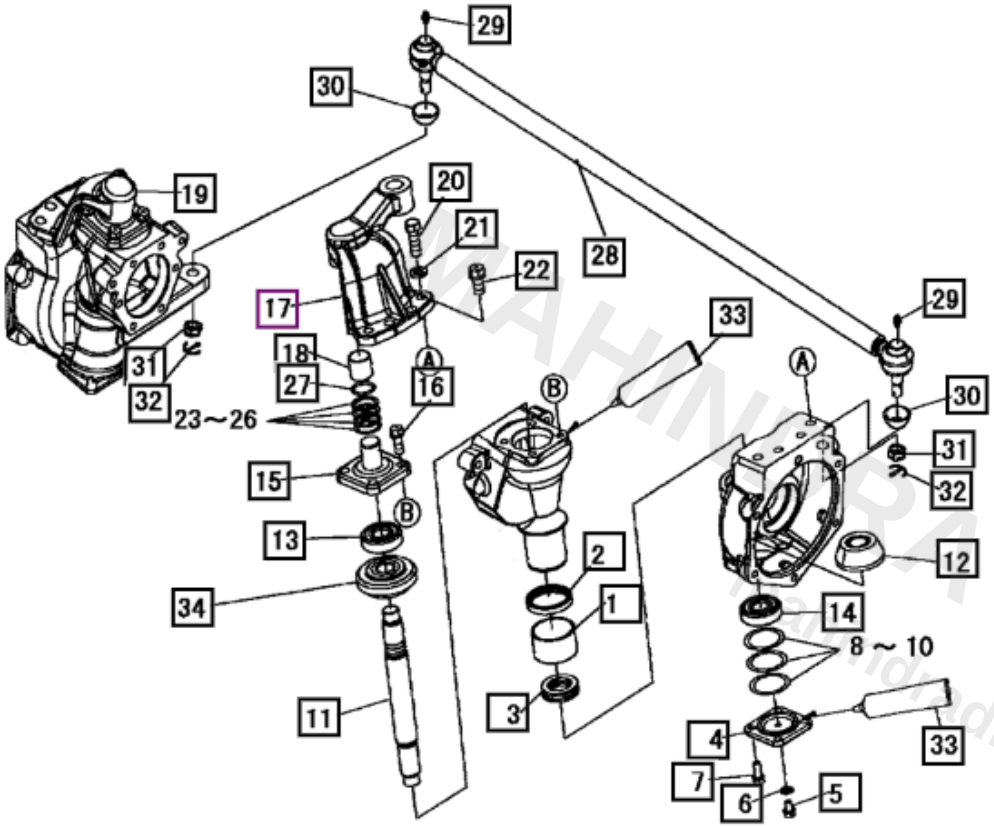

REF NO.	PART #	DESCRIPTION	PRICE	QTY NEEDED	SELECT QTY	ADD TO CART
18	07961025250	BUSHING	$19.78	2	2	ADD TO CART
19	19642127AG0	KNUCKLE, Arm R...	$258.52	1	1	ADD TO CART
20	6954263301	Bolt	$14.72	4	4	ADD TO CART
21	A3600101202	WASHER, Spring	$0.63	4	4	ADD TO CART
22	F1550112025	Bolt	$1.84	4	4	ADD TO CART
23-26	10212157000	SHIM Set	$105.34	1	1	ADD TO CART
23	14381319300	LINER F, Thrust	$5.98	AR	1	ADD TO CART

MAHINDRA DIRECT PARTS
mahindradirectparts.com

FRONT AXLE KNUCKLE

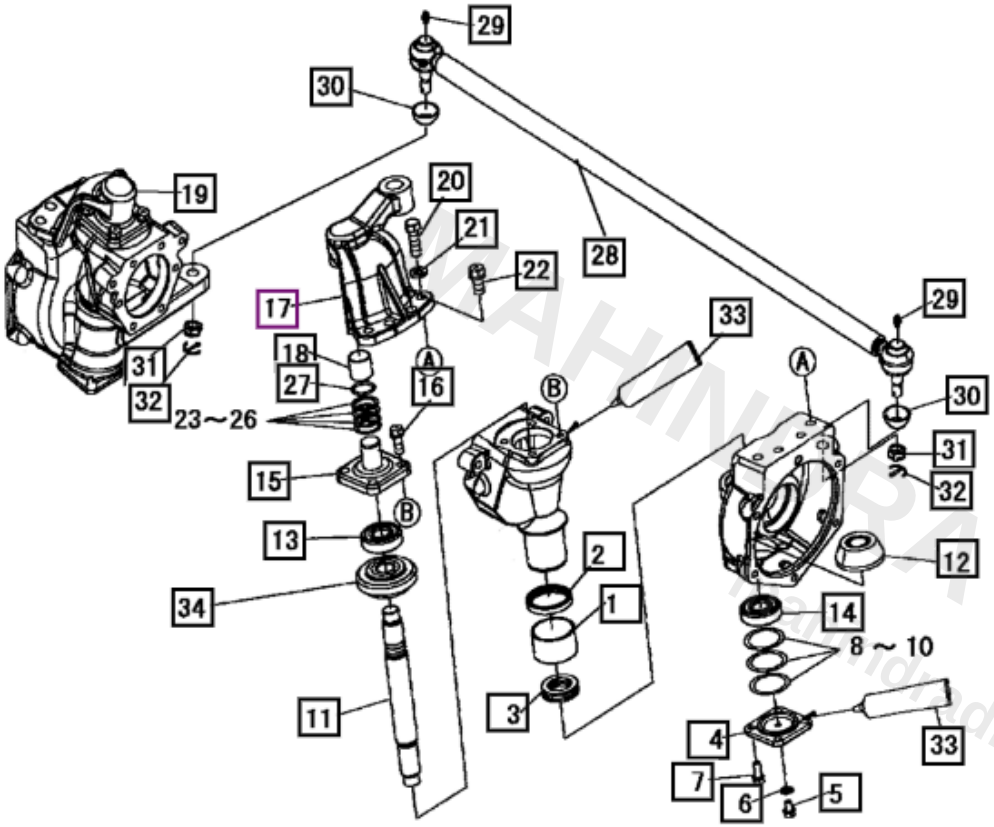

REF NO.	PART #	DESCRIPTION	PRICE	QTY NEEDED	SELECT QTY	ADD TO CART
24	14381319400	LINER G, Thrust	$5.98	AR	1	ADD TO CART
25	14381319500	LINER H, Thrust	$5.98	AR	1	ADD TO CART
26	14381319600	LINER J, Thrust	$5.98	AR	1	ADD TO CART
27	08300100240	O-Ring	$4.99	2	2	ADD TO CART
28	19453151AG0	TIE Rod	$411.24	1	1	ADD TO CART
29	A6500100600	NIPPLE, Grease	$3.22	2	2	ADD TO CART
30	10302157200	COVER, Dust	$5.06	2	2	ADD TO CART
31	10302157400	NUT	$2.91	2	2	ADD TO CART
32	10302157500	PIN Split	$0.70	2	2	ADD TO CART
33	TB1206D	GASKET	$312.34	AR	1	ADD TO CART
34	19453122000	GEAR, 16T	$135.70	1	1	ADD TO CART

MAHINDRA DIRECT PARTS
mahindradirectparts.com