FRONT AXLE SHAFT

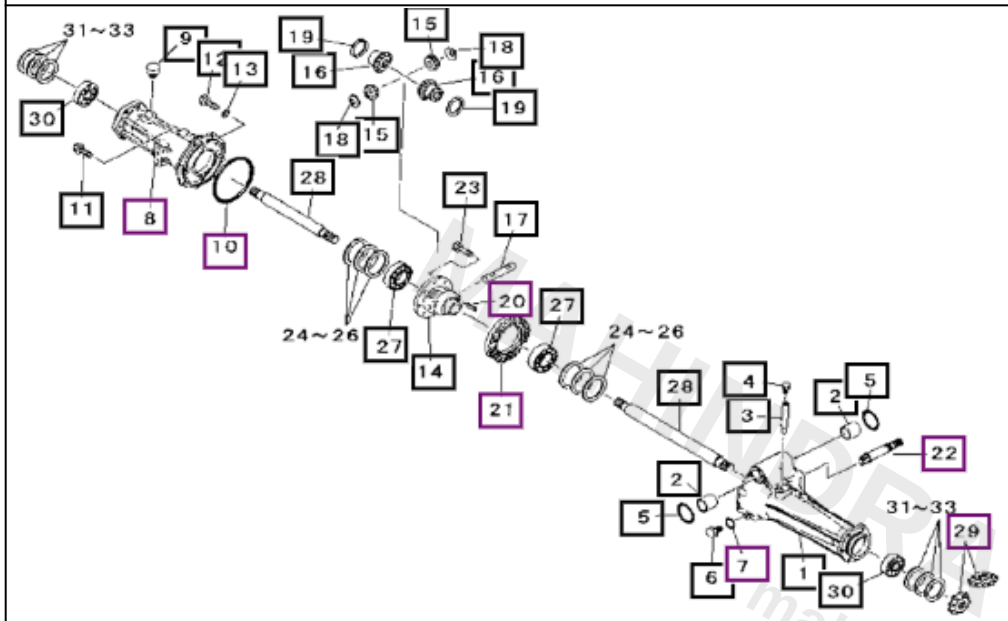

REF NO.	PART #	DESCRIPTION	PRICE	QTY NEEDED	SELECT QTY	ADD TO CART
1	19642112BR2	HOUSING, Axle A	$3,045.38	1	1	ADD TO CART
2	07963030400	BUSHING	$20.24	2	2	ADD TO CART
3	19642117BR0	Pipe	$60.26	1	1	ADD TO CART
4	11190621000	PLUG, Vent	$5.99	1	1	ADD TO CART
5	8300100290	O-RING	$3.68	2	2	ADD TO CART
6	F500016000	Plug, drain	$12.88	1	1	ADD TO CART
7	08331001600	WASHER, Seal M...	—	1		NOT AVAILABLE
8	10302119BR2	CASE B, CENTER	—	1		NOT AVAILABLE
9	11911211000	CAP, Oil	$14.72	1	1	ADD TO CART
10	8300501500	O-RING	$8.28	1	1	ADD TO CART
11	F1550110030	BOLT, W/Washer...	$1.88	7	7	ADD TO CART

MAHINDRA DIRECT PARTS
mahindradirectparts.com

FRONT AXLE SHAFT

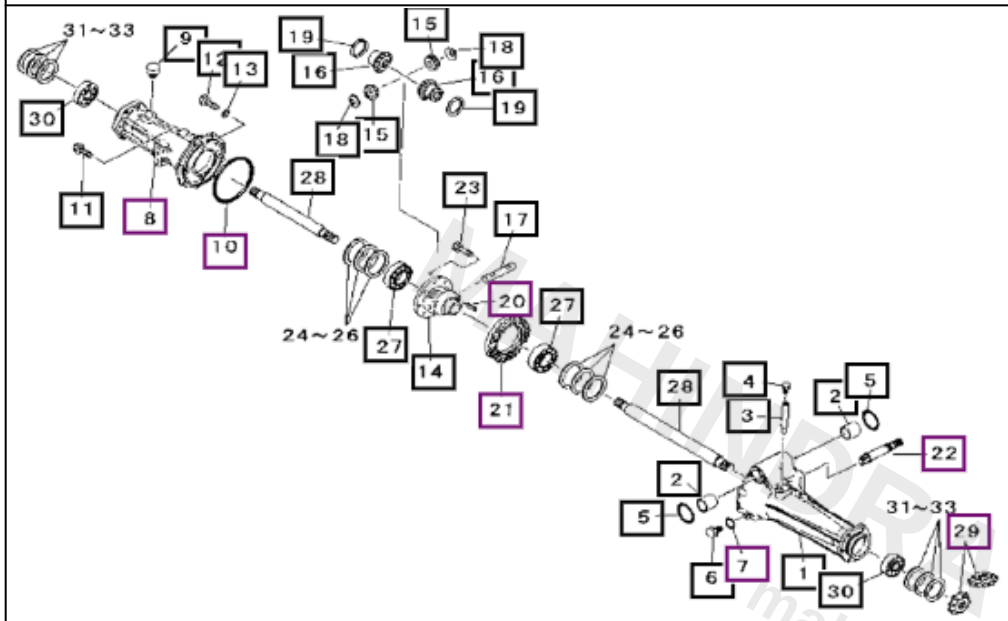

REF NO.	PART #	DESCRIPTION	PRICE	QTY NEEDED	SELECT QTY	ADD TO CART
12	6954264700	BOLT	$8.28	1	1	ADD TO CART
13	A3600101002	WASHER, spring...	$0.63	1	1	ADD TO CART
14	10312121000	CASE, Diff	$516.12	1	1	ADD TO CART
15	10191412000	PINION, Mate	$102.58	2	2	ADD TO CART
16	10191413000	GEAR, Side	$182.16	2	2	ADD TO CART
17	10191414000	SHAFT, Pinion	$75.90	1	1	ADD TO CART
18	10191415000	WASHER, Thrust	$11.04	2	2	ADD TO CART
19	10191416000	WASHER, Thrust	$5.98	2	2	ADD TO CART
20	5500006040	PIN, Spring 640	$2.30	1	1	ADD TO CART
21	*	HOUSING, Pinion	—	1		NOT AVAILABLE

MAHINDRA DIRECT PARTS
mahindradirectparts.com

FRONT AXLE SHAFT

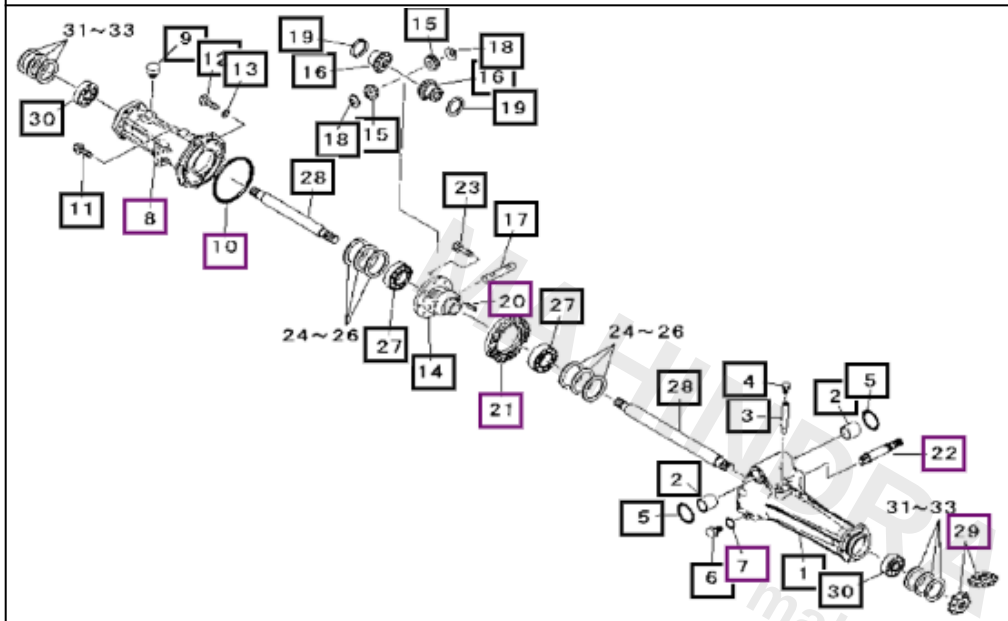

REF NO.	PART #	DESCRIPTION	PRICE	QTY NEEDED	SELECT QTY	ADD TO CART
22	*	HOUSING, Pinion	—	1		NOT AVAILABLE
23	12186568000	Bolt	$5.52	8	8	ADD TO CART
24-26	10070618000	LINER T=0.1	$14.72	AR	1	ADD TO CART
24-26	10070618100	Liner T=0.2	$9.66	AR	1	ADD TO CART
24-26	10070618200	Liner T=0.4	$9.66	AR	1	ADD TO CART
27	07500060100	BEARING, Ball	$72.13	2	2	ADD TO CART
28	10302128000	SHAFT, Diff	$165.14	2	2	ADD TO CART
29	19642118000	GEAR, 15T	—	4		NOT AVAILABLE
30	07500063050	BEARING, Ball	$37.61	2	2	ADD TO CART
31-33	11353016000	Liner T=0.1	$5.06	AR	1	ADD TO CART
31-33	07310002502	Liner T=0.2	$1.88	AR	1	ADD TO CART
31-33	07310002504	Liner T=0.4	$2.30	AR	1	ADD TO CART

MAHINDRA DIRECT PARTS
mahindradirectparts.com

FRONT AXLE INPUT

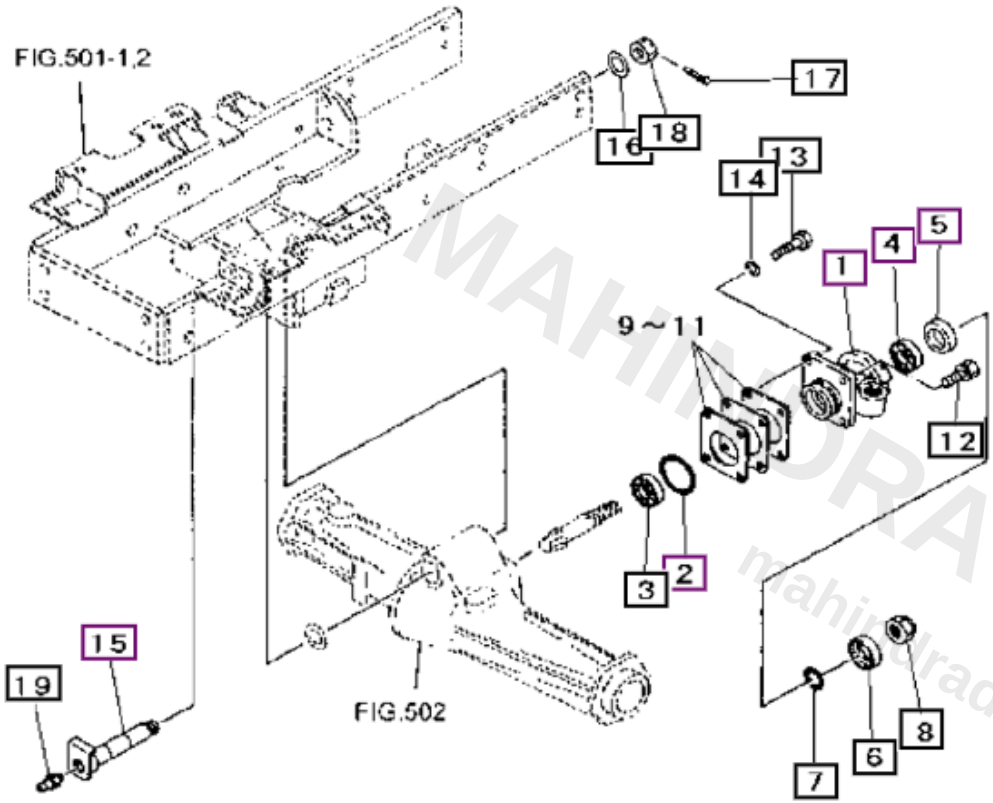

REF NO.	PART #	DESCRIPTION	PRICE	QTY NEEDED	SELECT QTY	ADD TO CART
1	19642116BR0	CASE, Pinion	$334.42	1	1	ADD TO CART
2	8300500600	O-RING 60	$5.06	1	1	ADD TO CART
3	10212141000	BEARING, Taper...	$83.26	1	1	ADD TO CART
4	7700130205	T.R.BRG NTN 4	$41.22	1	1	ADD TO CART
5	8401035529	SEAL Oil	$20.24	1	1	ADD TO CART
6	10212171000	Bushing	$117.30	1	1	ADD TO CART
7	08300200250	O-Ring	$2.76	1	1	ADD TO CART
8	10302123000	NUT M25	$40.48	1	1	ADD TO CART
9-11	10232136001	SHIM	$16.10	AR	1	ADD TO CART
9-11	10232137001	SHIM	$33.12	AR	1	ADD TO CART

MAHINDRA DIRECT PARTS
mahindradirectparts.com

FRONT AXLE INPUT

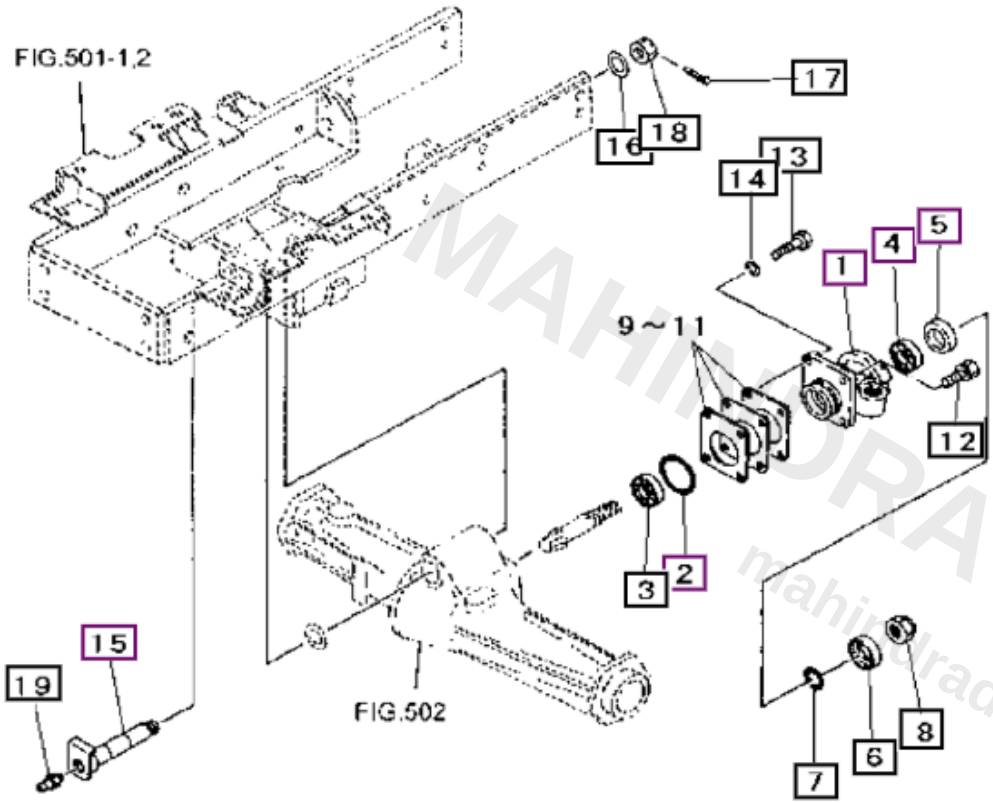

REF NO.	PART #	DESCRIPTION	PRICE	QTY NEEDED	SELECT QTY	ADD TO CART
9-11	10232138001	SHIM	$13.80	AR	1	ADD TO CART
12	F1550110030	BOLT, W/Washer...	$1.88	3	3	ADD TO CART
13	6954264700	BOLT	$8.28	1	1	ADD TO CART
14	A3600101002	WASHER, spring...	$0.63	1	1	ADD TO CART
15	19642065BR1	PIN, Center	—	1		NOT AVAILABLE
16	11352064000	Plate	$13.34	1	1	ADD TO CART
17	05200150040	PIN, Split	$1.25	1	1	ADD TO CART
18	A3130102401	NUT, Slotted	$7.82	1	1	ADD TO CART
19	A6503100300	NIPPLE, Grease	$3.22	1	1	ADD TO CART

MAHINDRA DIRECT PARTS
mahindradirectparts.com

FRONT AXLE KNUCKLE AND HUB

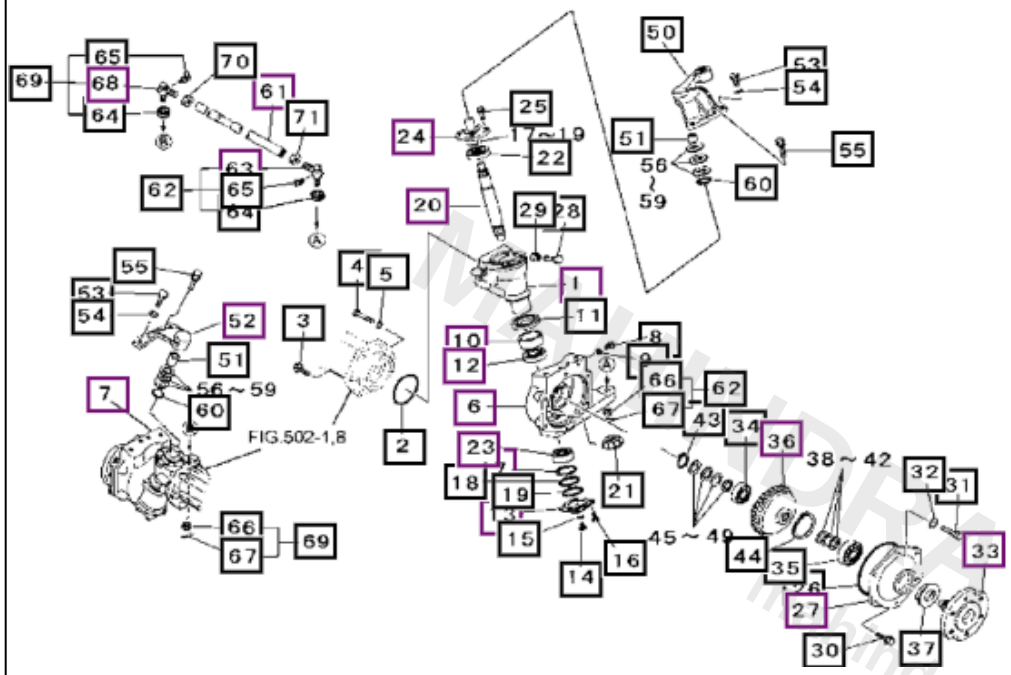

REF NO.	PART #	DESCRIPTION	PRICE	QTY NEEDED	SELECT QTY	ADD TO CART
1	10302136BR0	CASE, King Pin	$561.66	2	2	ADD TO CART
2	08300500750	O-RING	$6.44	2	2	ADD TO CART
3	F1550110030	BOLT, W/Washer...	$1.88	10	10	ADD TO CART
4	6954264700	BOLT	$8.28	2	2	ADD TO CART
5	A3600101002	WASHER, spring...	$0.63	2	2	ADD TO CART
6	19642121BR0	CASE, Final L.H.	$1,489.02	1	1	ADD TO CART
7	19642122BR0	CASE, Final R.H.	$1,489.02	1	1	ADD TO CART
8	27403214200	PLUG	$1.88	2	2	ADD TO CART
9	08331000800	WASHER, Seal M8	$1.84	2	2	ADD TO CART

MAHINDRA DIRECT PARTS
mahindradirectparts.com

FRONT AXLE KNUCKLE AND HUB

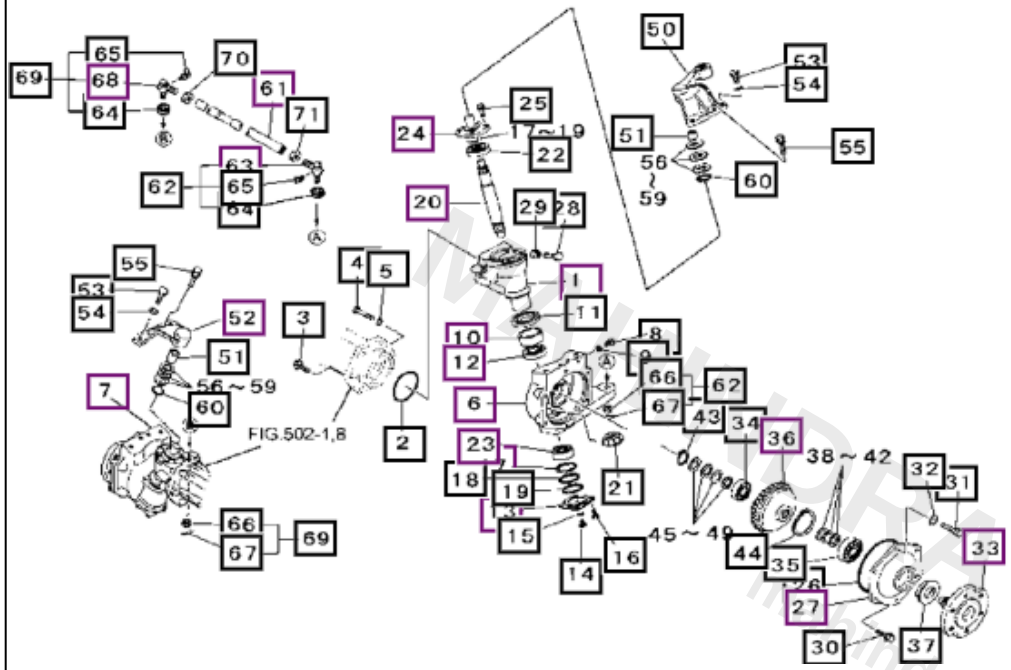

REF NO.	PART #	DESCRIPTION	PRICE	QTY NEEDED	SELECT QTY	ADD TO CART
10	7961050300	Bushing	$51.00	2	2	ADD TO CART
11	6954265100	SEAL, Oil	$38.18	2	2	ADD TO CART
12	7600051106	T.BRG NSK5110	$38.64	2	2	ADD TO CART
13	10070638BR1	COVER	$132.48	2	2	ADD TO CART
14	27403214200	PLUG	$1.88	2	2	ADD TO CART
15	08331000800	WASHER, Seal M8	$1.84	2	2	ADD TO CART
16	F1540108020	BOLT, W/Washer...	$1.25	8	8	ADD TO CART
17-19	19632139000	SHIM Set	$36.34	1	1	ADD TO CART
17	7300005201	LINER T=0.15	$1.84	AR	1	ADD TO CART

MY KUBOTA DIRECT PARTS
mykubotadirectparts.com

FRONT AXLE KNUCKLE AND HUB

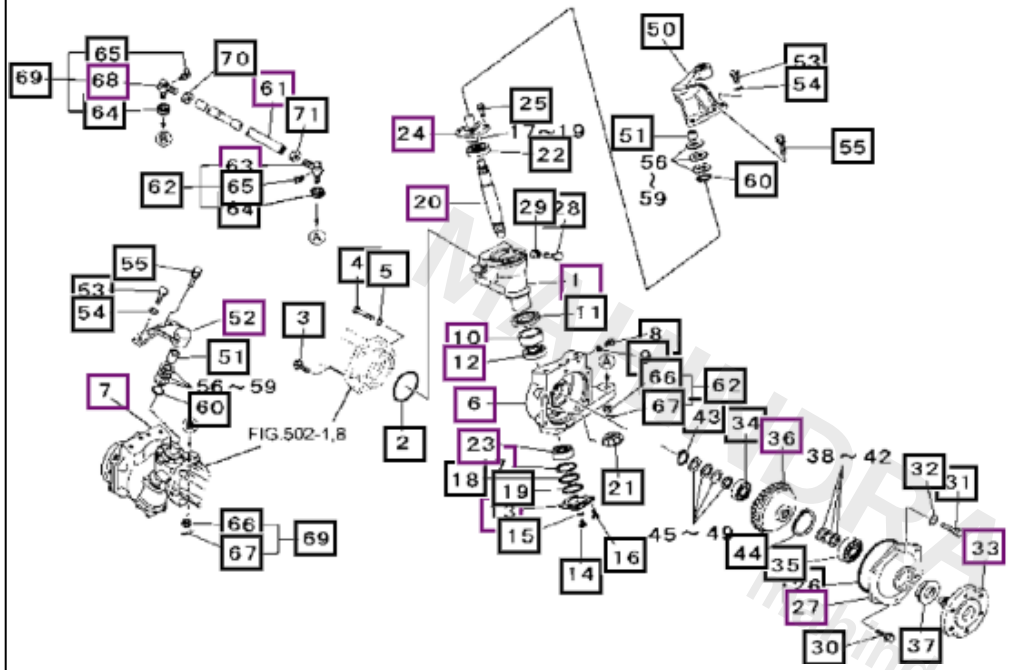

REF NO.	PART #	DESCRIPTION	PRICE	QTY NEEDED	SELECT QTY	ADD TO CART
18	07300005202	Liner T=0.2	$1.84	AR	1	ADD TO CART
19	07300005203	LINER	$1.84	AR	1	ADD TO CART
20	19642124000	SHAFT	$257.14	2	2	ADD TO CART
21	10212124000	GEAR 12	$258.52	2	2	ADD TO CART
22	07500563044	BEARING, Ball N...	$39.16	2	2	ADD TO CART
23	7500263040	B.BRG NTN TMB	$20.70	2	2	ADD TO CART
24	10212120BR0	HOLDER	$167.90	2	2	ADD TO CART

MAHINDRA DIRECT PARTS
mahindradirectparts.com

FRONT AXLE KNUCKLE AND HUB

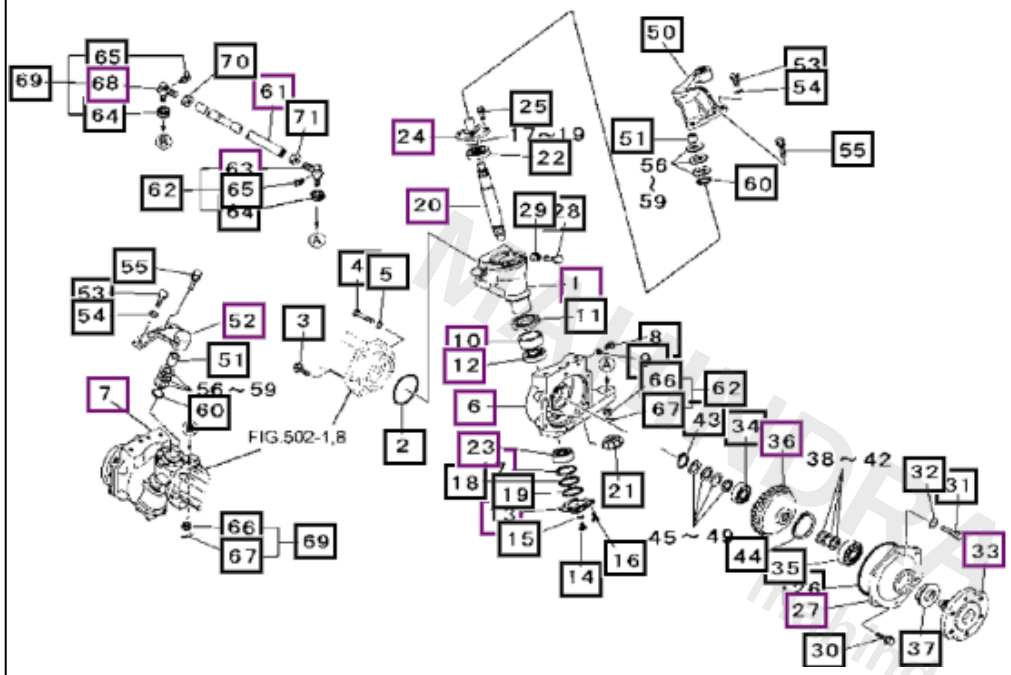

REF NO.	PART #	DESCRIPTION	PRICE	QTY NEEDED	SELECT QTY	ADD TO CART
25	F1550110025	BOLT, W/Washer...	$1.88	8	8	ADD TO CART
26	8300501450	O-RING	$7.36	2	2	ADD TO CART
27	10212119BR0	Cover	$349.14	2	2	ADD TO CART
28	A0520110040	BOLT, 7T	$4.14	2	2	ADD TO CART
29	A3030110002	Nut	$0.70	2	2	ADD TO CART
30	F1550110025	BOLT, W/Washer...	$1.88	10	10	ADD TO CART
31	6954264700	BOLT	$8.28	2	2	ADD TO CART
32	A3600101002	WASHER, spring...	$0.63	2	2	ADD TO CART
33	19832112BR0	SHAFT	$1,023.96	2	2	ADD TO CART
34	07500063050	BEARING, Ball	$37.61	2	2	ADD TO CART
35	07500063060	BEARING, Ball N...	$48.94	2	2	ADD TO CART
36	10212123000	GEAR 32	$744.74	2	2	ADD TO CART

MAHINDRA DIRECT PARTS
mahindradirectparts.com

FRONT AXLE KNUCKLE AND HUB

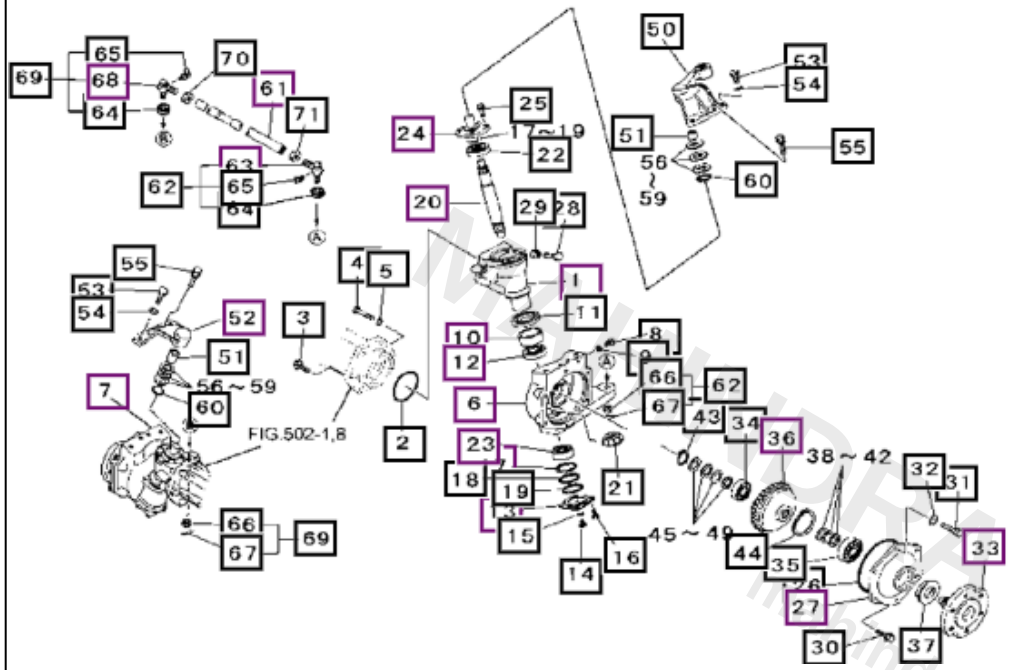

REF NO.	PART #	DESCRIPTION	PRICE	QTY NEEDED	SELECT QTY	ADD TO CART
37	08412355212	SEAL, Oil	$30.54	2	2	ADD TO CART
38-42	07310003001	Liner T=0.15	$2.30	AR	1	ADD TO CART
38-42	07310003004	Liner T=0.4	$1.88	AR	1	ADD TO CART
38-42	7310003008	LINER	$1.88	AR	1	ADD TO CART
38-42	7310003010	LINER	$2.30	AR	1	ADD TO CART
38-42	7310003012	LINER	$2.76	AR	1	ADD TO CART
43	07400002500	C-RING	$1.88	2	2	ADD TO CART
44	07410007201	C-RING Dia. 72	$5.06	2	2	ADD TO CART
45-49	11353016000	Liner T=0.1	$5.06	AR	1	ADD TO CART
45-49	7310002504	LINER, T=0.4	$2.30	AR	1	ADD TO CART
45-49	7310002508	LINER T=0.8	$5.52	AR	1	ADD TO CART

MAHINDRA DIRECT PARTS
mahindradirectparts.com

FRONT AXLE KNUCKLE AND HUB

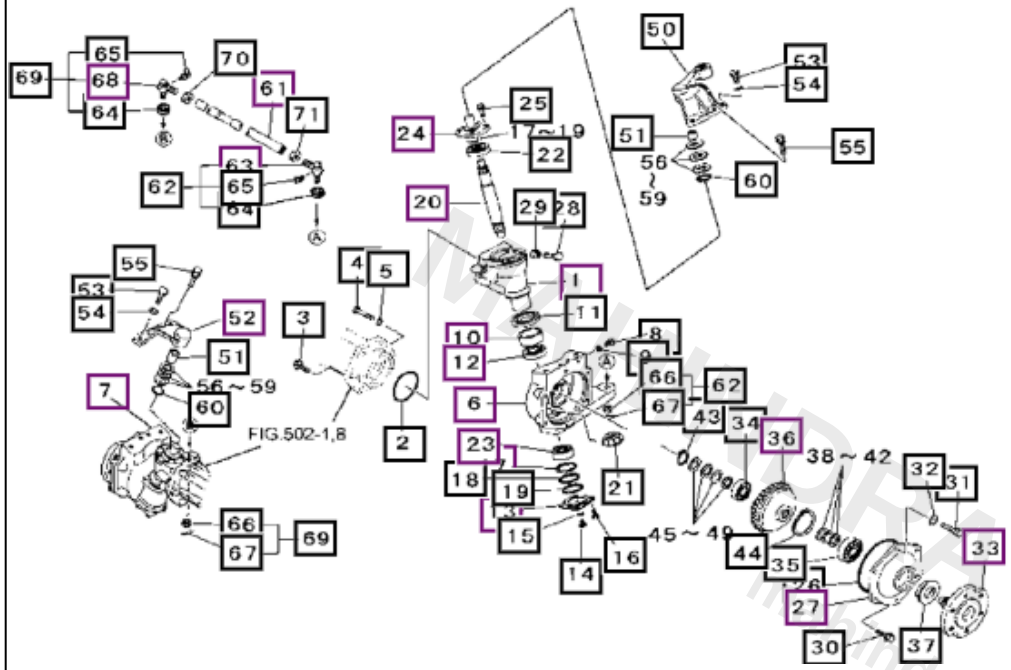

REF NO.	PART #	DESCRIPTION	PRICE	QTY NEEDED	SELECT QTY	ADD TO CART
45-49	7310002510	LINER	—	AR		NOT AVAILABLE
45-49	7310002512	LINER	$3.68	AR	1	ADD TO CART
50	19642126BR0	KNUCKLE, Arm L....	$353.74	1	1	ADD TO CART
51	7961025250	BUSHING	$19.78	2	2	ADD TO CART
52	19642127BR0	KNUCKLE ARM RH	$258.52	1	1	ADD TO CART
53	6954263301	Bolt	$14.72	4	4	ADD TO CART
54	A3600101202	WASHER, Spring	$0.63	4	4	ADD TO CART
55	F1550112025	Bolt	$1.84	4	4	ADD TO CART
56-59	14381319300	LINER F, Thrust	$5.98	AR	1	ADD TO CART
56-59	14381319400	LINER G, Thrust	$5.98	AR	1	ADD TO CART
56-59	14381319500	LINER H, Thrust	$5.98	AR	1	ADD TO CART
56-59	14381319600	LINER J, Thrust	$5.98	AR	1	ADD TO CART

MAHINDRA DIRECT PARTS
mahindradirectparts.com

FRONT AXLE KNUCKLE AND HUB

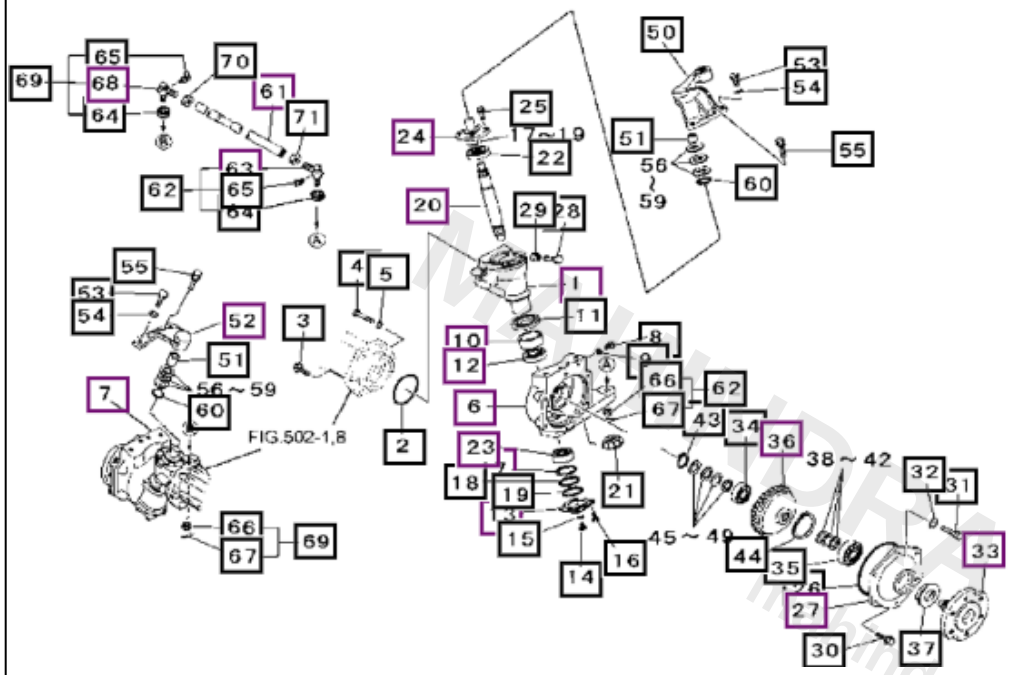

REF NO.	PART #	DESCRIPTION	PRICE	QTY NEEDED	SELECT QTY	ADD TO CART
60	08300100240	O-Ring	$4.99	2	2	ADD TO CART
61	19642132BR0	ROD	$281.06	1	1	ADD TO CART
62	10302158BR0	ROD End LH	$69.92	1	1	ADD TO CART
63	*	HOUSING, Pinion	—	1		NOT AVAILABLE
64	10302157200	COVER, Dust	$5.06	2	2	ADD TO CART
65	10302157300	NIPPLE GREASE	$2.76	2	2	ADD TO CART
66	10302157400	NUT	$2.91	2	2	ADD TO CART
67	10302157500	PIN Split	$0.70	2	2	ADD TO CART
68	*	HOUSING, Pinion	—	1		NOT AVAILABLE
69	10302157BR0	ROD End RH	$84.64	1	1	ADD TO CART
70	6735400201	Nut	$9.20	1	1	ADD TO CART

MAHINDRA DIRECT PARTS
mahindradirectparts.com

FRONT AXLE KNUCKLE AND HUB

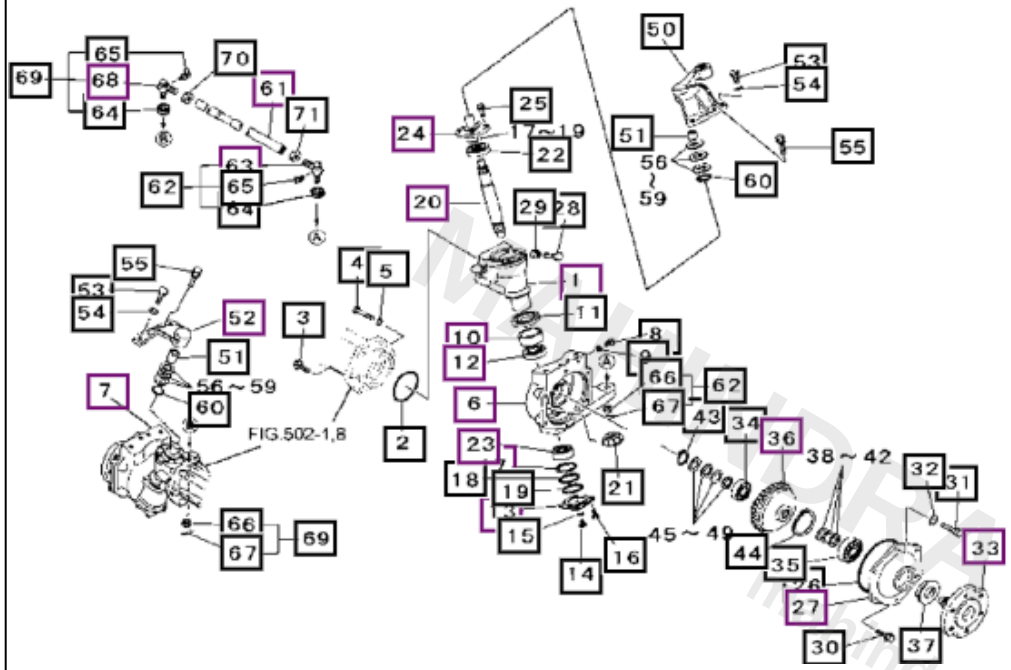

REF NO.	PART #	DESCRIPTION	PRICE	QTY NEEDED	SELECT QTY	ADD TO CART
71	6735400301	NUT	$3.46	1	1	ADD TO CART

MY KUBOTA DIRECT PARTS
mykubotadirectparts.com