FRONT AXLE DIFFERENTIAL

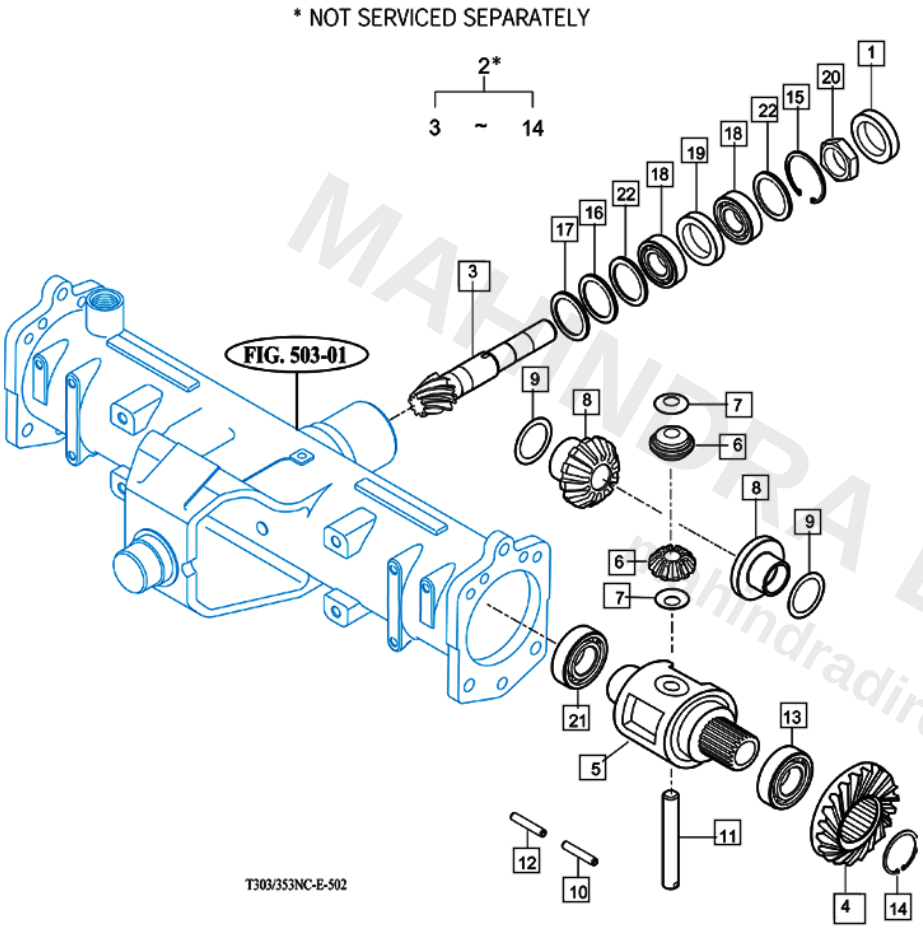

REF NO.	PART #	DESCRIPTION	PRICE	QTY NEEDED	SELECT QTY	ADD TO CART
001	V7441256210	SEAL. Oil	$13.99	1	1	ADD TO CART
002	16704112000	DIFF Assy In...	$1,367.12	1	1	ADD TO CART
002	16704112001	DIFF ASSY FF	$1,367.12	1	1	ADD TO CART
002	16704112002	DIFF ASSY,...	$1,367.12	1	1	ADD TO CART
003	16704112010	PINION, Bev...	$235.98	1	1	ADD TO CART
003	16704112011	PINION BEV...	$235.98	1	1	ADD TO CART
004	16704112110	GEAR Bevel...	$362.48	1	1	ADD TO CART
004	16704112111	GEAR BEVE...	$357.99	1	1	ADD TO CART
005	16704310030	CASE, Front...	$203.78	1	1	ADD TO CART

MAHINDRA DIRECT PARTS
mahindradirectparts.com

FRONT AXLE DIFFERENTIAL

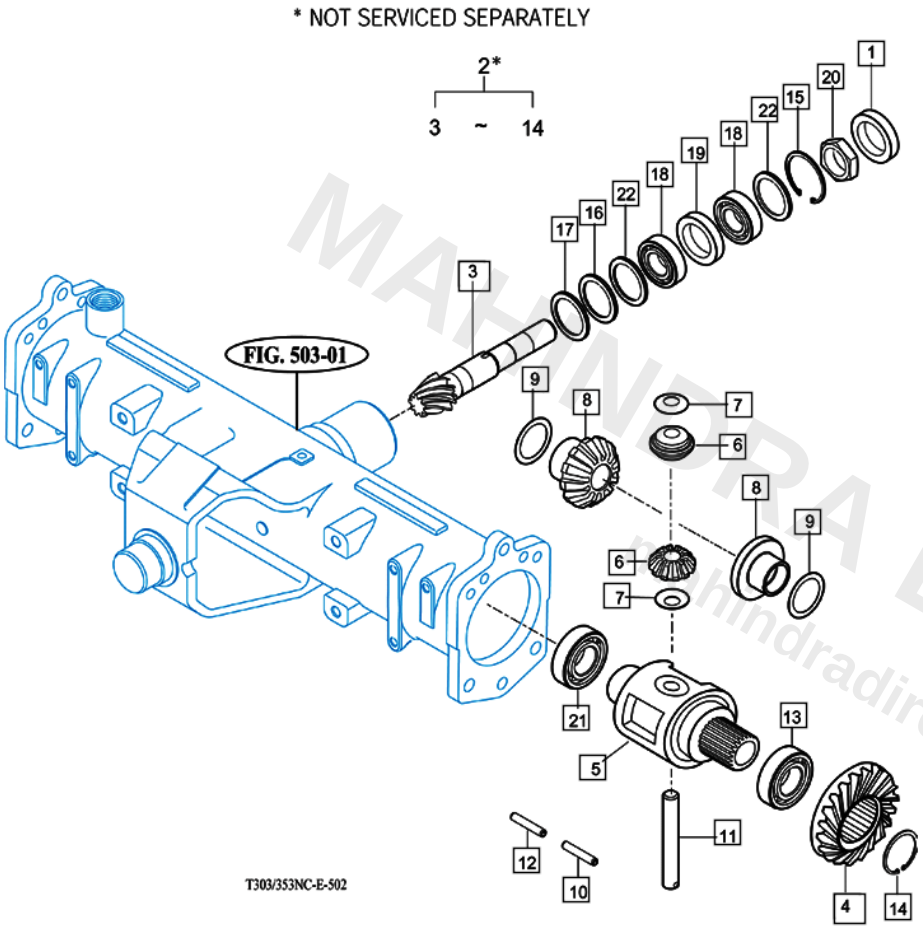

REF NO.	PART #	DESCRIPTION	PRICE	QTY NEEDED	SELECT QTY	ADD TO CART
005	16704310031	CASE FF DIFF	$203.78	1	1	ADD TO CART
006	16704320020	PINION, Diff(...	$46.92	2	2	ADD TO CART
007	14273010050	PINION Thru...	$14.26	2	2	ADD TO CART
008	16704310160	GEAR, Diff S...	$120.98	2	2	ADD TO CART
009	16704320050	WASHER, T...	$10.58	2	2	ADD TO CART
010	V5801405025	SPRING PIN	$3.68	1	1	ADD TO CART
011	16704110060	SHAFT, Diff...	$113.16	1	1	ADD TO CART
012	V5801403025	PIN, Spring	$3.68	1	1	ADD TO CART
013	V6001106212	BEARING, Ball	$133.40	1	1	ADD TO CART

MAHINDRA DIRECT PARTS
mahindradirectparts.com

FRONT AXLE DIFFERENTIAL

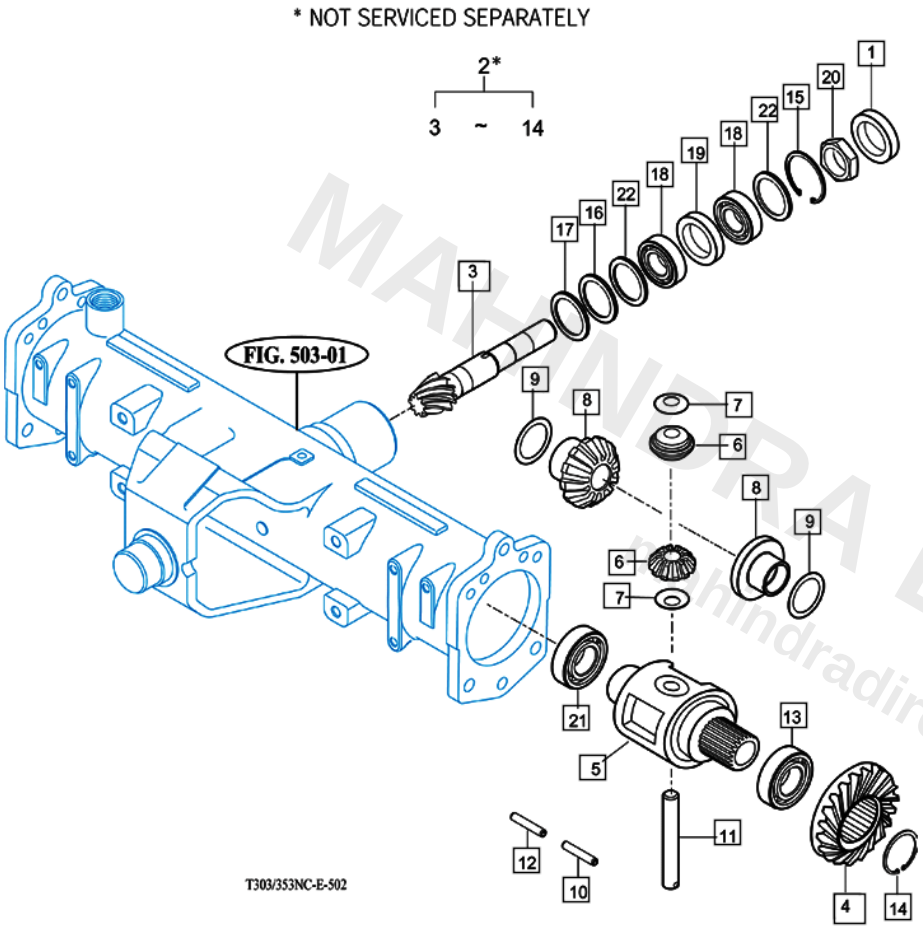

REF NO.	PART #	DESCRIPTION	PRICE	QTY NEEDED	SELECT QTY	ADD TO CART
014	17994420060	SNAP, Ring...	$8.99	1	1	ADD TO CART
015	V7051400620	C-TYPE Sto...	$7.82	1	1	ADD TO CART
016	14254310080	SHIM (A) T=...	$2.76	1	1	ADD TO CART
017	14152050160	SHIM (B) T=...	$20.24	1	1	ADD TO CART
018	15024320020	BEARING, T...	$135.70	2	2	ADD TO CART
019	16704112120	COLLAR	$14.26	1	1	ADD TO CART
020	14884110090	NUT, M30	—	1		NOT AVAILABLE
021	V6001106211	BEARING, Ball	$97.06	1	1	ADD TO CART
022	16704110121	SHIM	$11.04	2	2	ADD TO CART

MAHINDRA DIRECT PARTS
mahindradirectparts.com

FRONT AXLE HOUSING

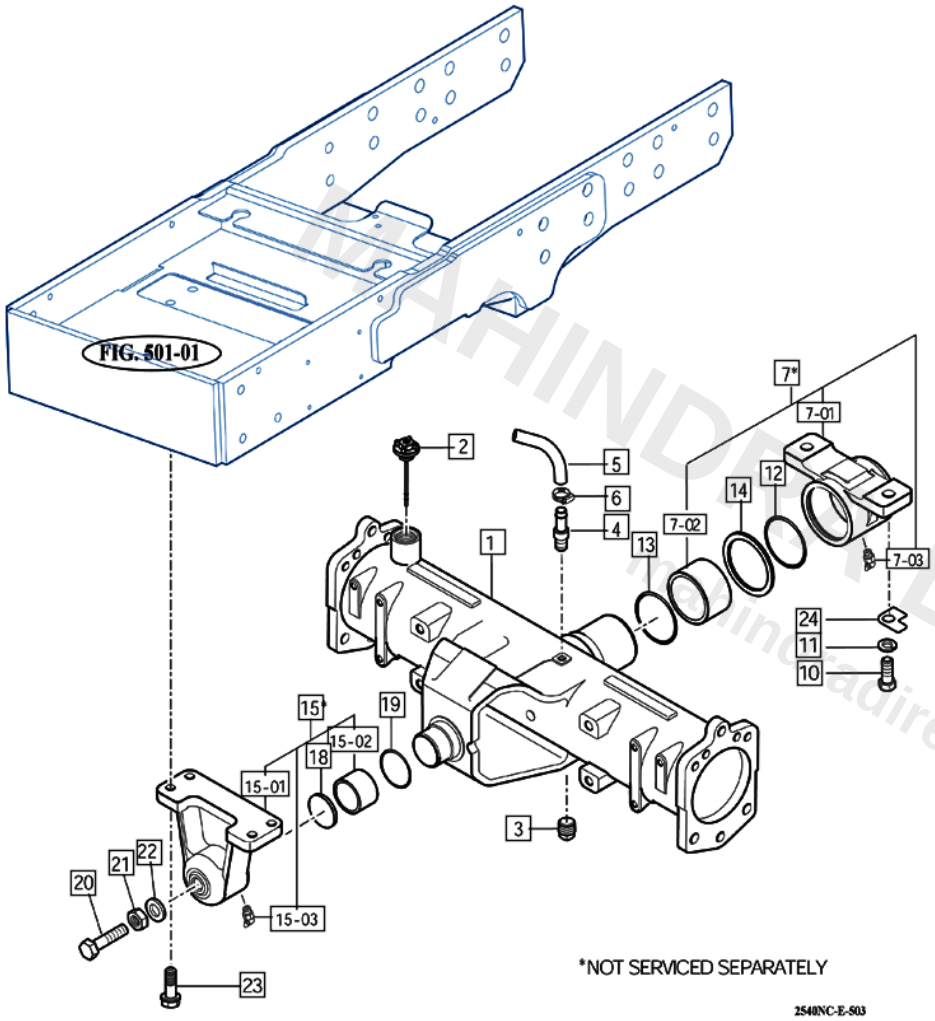

REF NO.	PART #	DESCRIPTION	PRICE	QTY NEEDED	SELECT QTY	ADD TO CART
001	14524322000M	HOUSING, F...	$1,538.88	1	1	ADD TO CART
002	12394125100	CAP Assy, Oil	$19.85	1	1	ADD TO CART
003	V7811600008	PLUG, Square	$6.90	1	1	ADD TO CART
004	17994360221	CONNECTO...	$7.82	1	1	ADD TO CART
005	19021024300	HOSE . 530	$4.14	1	1	ADD TO CART
006	17131049210	CLIP, Hose...	$1.88	1	1	ADD TO CART
007	16704362201	METAL Assy...	—	1		NOT AVAILABLE
00701	16704362211M	METAL, Pivot	$207.00	1	1	ADD TO CART
00702	16704362221	BUSH, 75X8...	$46.92	1	1	ADD TO CART

MAHINDRA DIRECT PARTS
mahindradirectparts.com

FRONT AXLE HOUSING

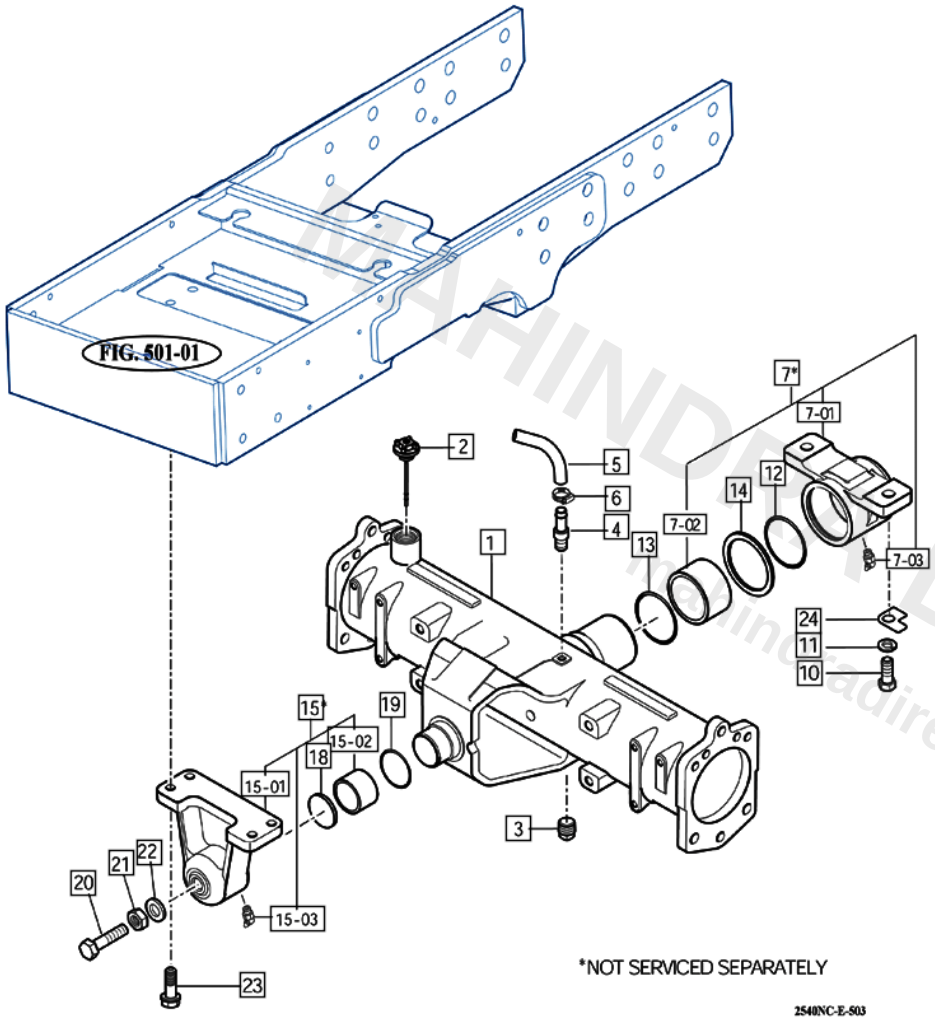

REF NO.	PART #	DESCRIPTION	PRICE	QTY NEEDED	SELECT QTY	ADD TO CART
00703	V7631500000	GREASE Nip...	$9.20	1	1	ADD TO CART
010	V2004616050	BOLT, Hex	$6.90	2	2	ADD TO CART
011	V4011600160	WASHER Sp...	$2.76	2	2	ADD TO CART
012	V7201035040	O-RING (P)...	$4.92	1	1	ADD TO CART
013	V7211031080	O-RING G	$5.99	1	1	ADD TO CART
014	16704310040	SPACER, R	$5.86	1	1	ADD TO CART
015	16704332101	METAL Assy...	$213.90	1	1	ADD TO CART
01501	16704332111M	METAL, Pivo...	—	1		NOT AVAILABLE
01502	16704332220	BUSH, 50X5...	$39.99	1	1	ADD TO CART

MAHINDRA DIRECT PARTS
mahindradirectparts.com

FRONT AXLE HOUSING

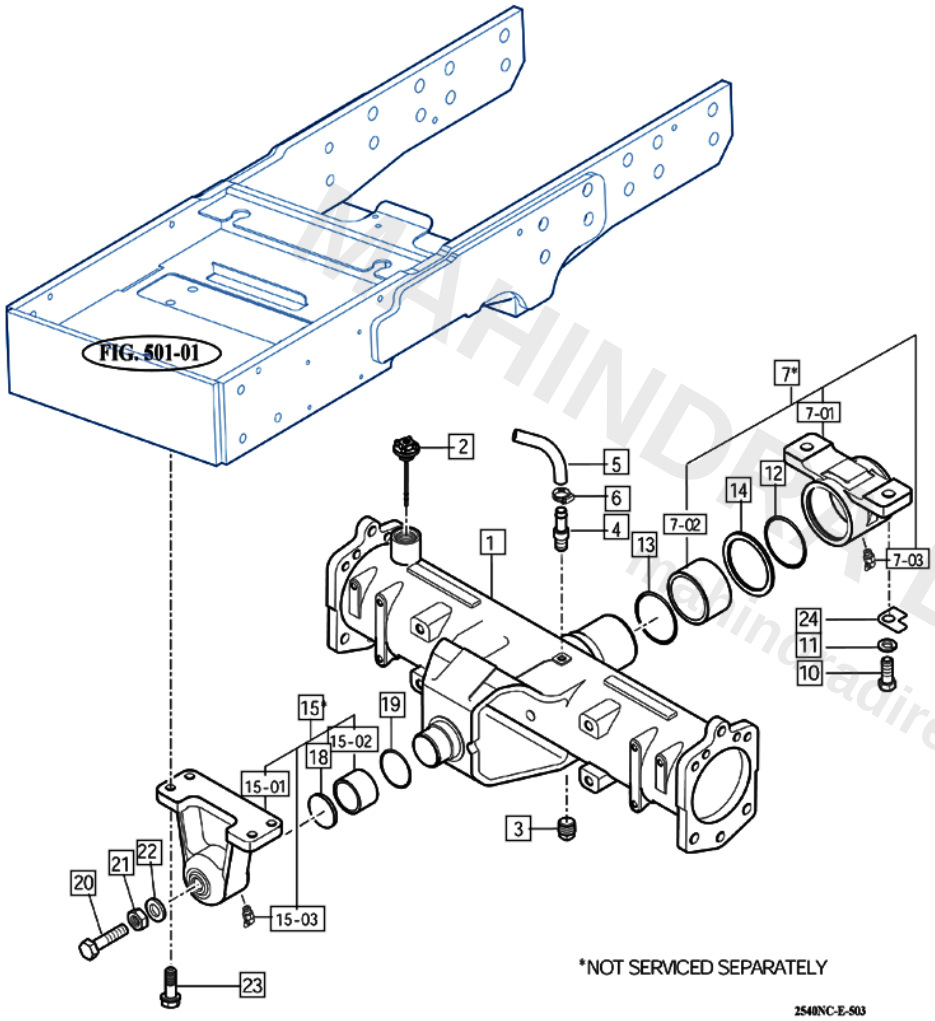

REF NO.	PART #	DESCRIPTION	PRICE	QTY NEEDED	SELECT QTY	ADD TO CART
01503	V7631500000	GREASE Nip...	$9.20	1	1	ADD TO CART
018	16704020020	SPACER, Sp...	$5.06	1	1	ADD TO CART
019	V7211031055	O-RING , G	$6.99	1	1	ADD TO CART
020	V2014616050	BOLT, Hex...	$6.90	1	1	ADD TO CART
021	V3052600160	NUT, Hex/3	$3.68	1	1	ADD TO CART
022	14444120090	WASHER, S...	$6.44	1	1	ADD TO CART
023	V2173612040	BOLT, Hex	$5.52	4	4	ADD TO CART
024	14051060030	WASHER T=...	$3.22	2	2	ADD TO CART

MAHINDRA DIRECT PARTS
mahindradirectparts.com

FRONT AXLE GEAR CASE 1

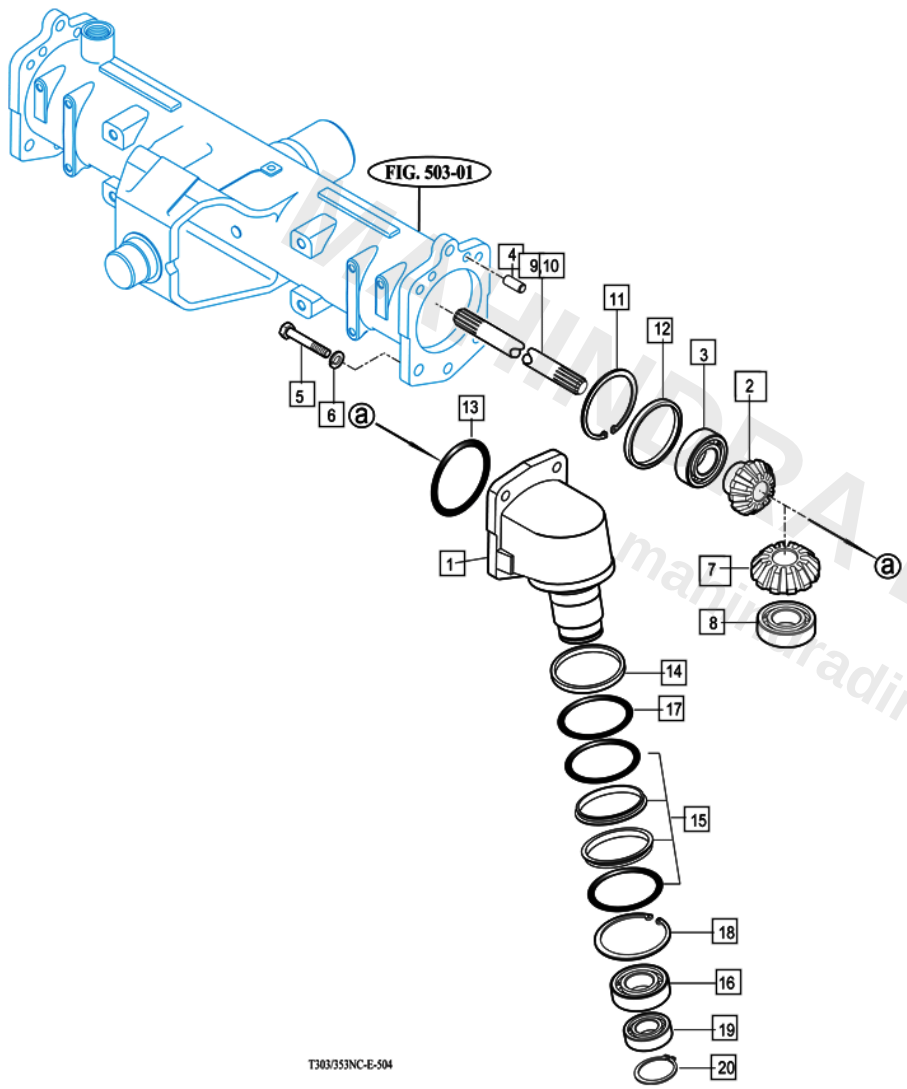

REF NO.	PART #	DESCRIPTION	PRICE	QTY NEEDED	SELECT QTY	ADD TO CART
001	16704340010M	Case Final D...	$470.58	2	2	ADD TO CART
002	16704340020	GEAR, Bevel 9	$234.14	2	2	ADD TO CART
002	16704340021	GEAR BEVE...	$234.14	2	2	ADD TO CART
003	V6041106208	BALL BEARI...	$75.90	2	2	ADD TO CART
004	V5201012020	PIN, Parallel/...	$6.90	4	4	ADD TO CART
005	V2024614040	BOLT, Hex F...	$5.52	10	10	ADD TO CART
006	V4011600140	WASHER, S...	$2.76	10	10	ADD TO CART
007	16704340030	GEAR, Bevel...	$233.77	2	2	ADD TO CART
007	16704340031	GEAR BEVE...	$233.77	2	2	ADD TO CART
008	V6001106207	BALL Bearin...	$46.92	2	2	ADD TO CART
009	16704130010	SHAFT (LH/...	$84.64	1	1	ADD TO CART
010	16704130020	SHAFT (RH/...	$59.34	1	1	ADD TO CART

MAHINDRA DIRECT PARTS
mahindradirectparts.com

FRONT AXLE GEAR CASE 1

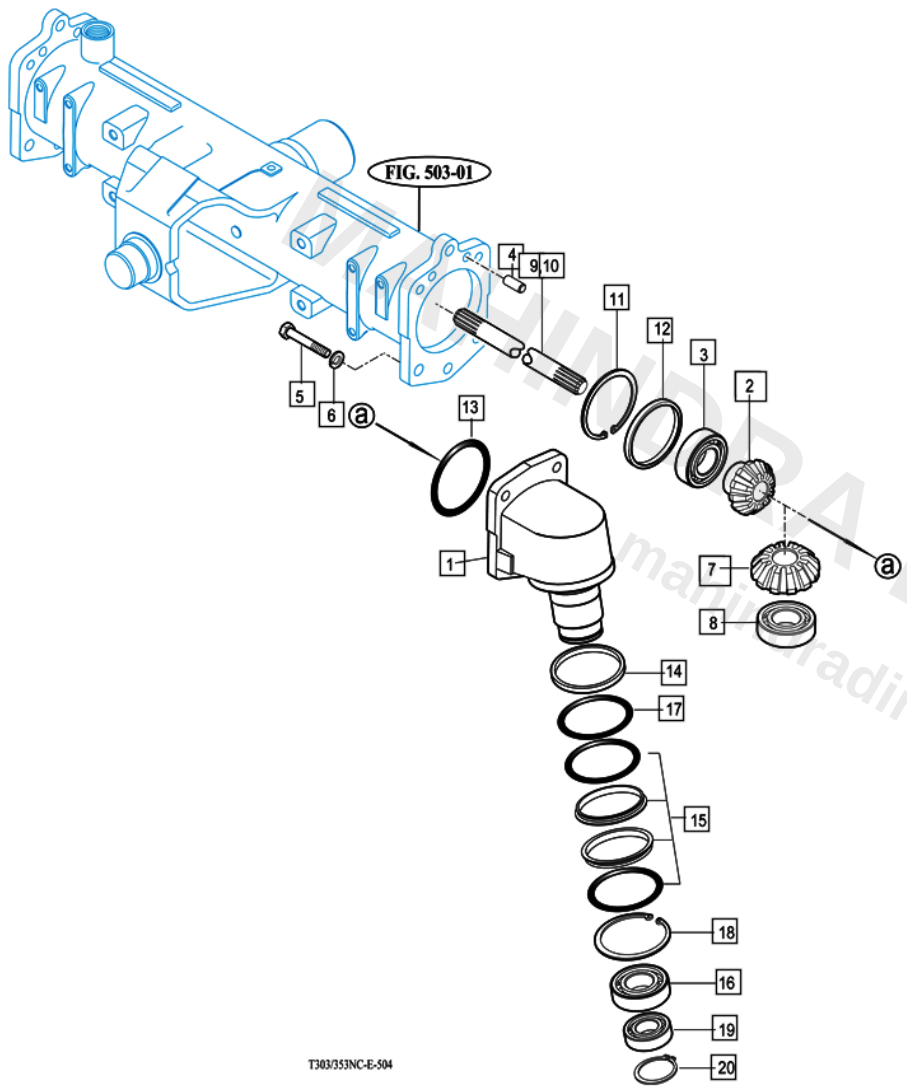

REF NO.	PART #	DESCRIPTION	PRICE	QTY NEEDED	SELECT QTY	ADD TO CART
011	V7051400800	C-RING, Hol...	$12.42	2	2	ADD TO CART
012	16704320030	COLLAR, 68...	$6.44	2	2	ADD TO CART
013	V7231020110	O-RING, S S...	$10.99	2	2	ADD TO CART
014	16704130080	HOUSING, S...	$71.30	2	2	ADD TO CART
015	16704340040	SEAL Assy	$104.42	2	2	ADD TO CART
016	V6001106014	BEARING, B...	$239.66	2	2	ADD TO CART
017	V7231020115	O-RING	$7.82	2	2	ADD TO CART
018	V7051400950	C-RING, Hole	$18.86	2	2	ADD TO CART
019	V6001106012	BEARING, B...	$99.82	2	2	ADD TO CART
020	V7041400600	C-RING, Sha...	$6.44	2	2	ADD TO CART
*	16704309301A	CASE ASSY,...	—	1		NOT AVAILABLE
*	16704309302	CASE ASSY...	—	1		NOT AVAILABLE

MAHINDRA DIRECT PARTS
mahindradirectparts.com

FRONT AXLE GEAR CASE 2

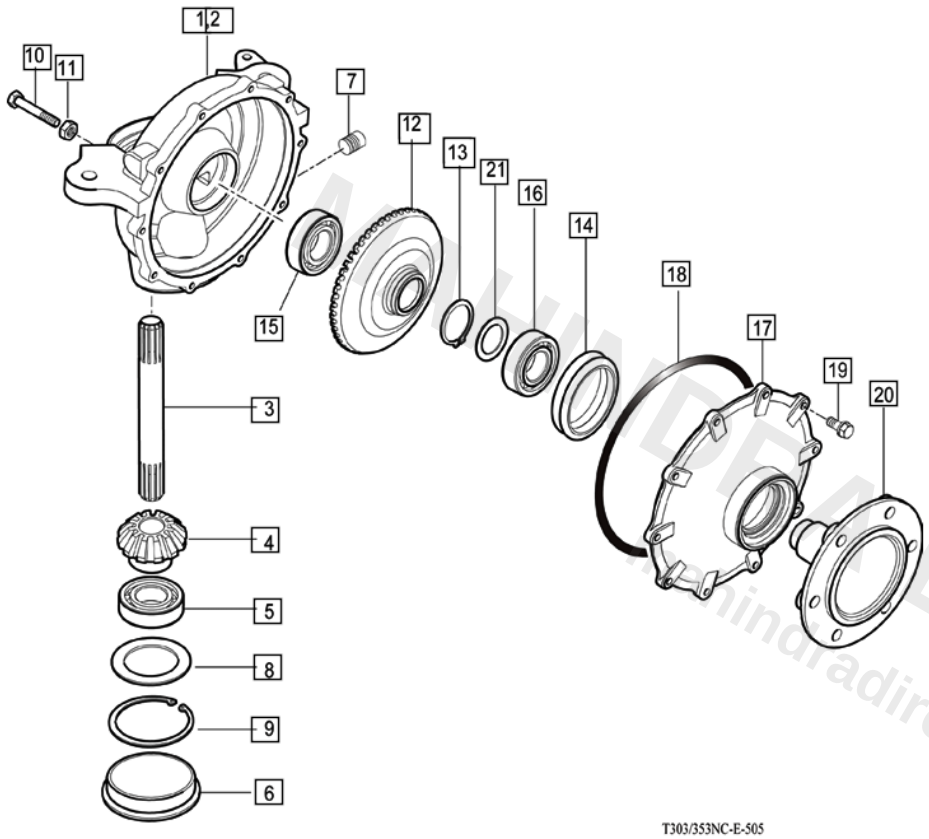

REF NO.	PART #	DESCRIPTION	PRICE	QTY NEEDED	SELECT QTY	ADD TO CART
001	14514342001M	CASE, LH Fi...	$520.72	1	1	ADD TO CART
002	14514342101M	CASE, RH Fi...	$591.10	1	1	ADD TO CART
003	16704130050	SHAFT	$34.96	2	2	ADD TO CART
004	16704130100	GEAR, Bevel...	$104.42	2	2	ADD TO CART
005	V6001106308	BEARING, B...	$86.48	2	2	ADD TO CART
006	16704330180	CAP, 90	$15.64	2	2	ADD TO CART
007	V7811600006	PLUG .Squar...	$6.90	4	4	ADD TO CART
008	16704130060	SHIM, 75X90...	$6.44	2	2	ADD TO CART
009	V7051400900	C-RING, Hol...	$21.16	2	2	ADD TO CART

MAHINDRA DIRECT PARTS
www.mahindradirectparts.com

FRONT AXLE GEAR CASE 2

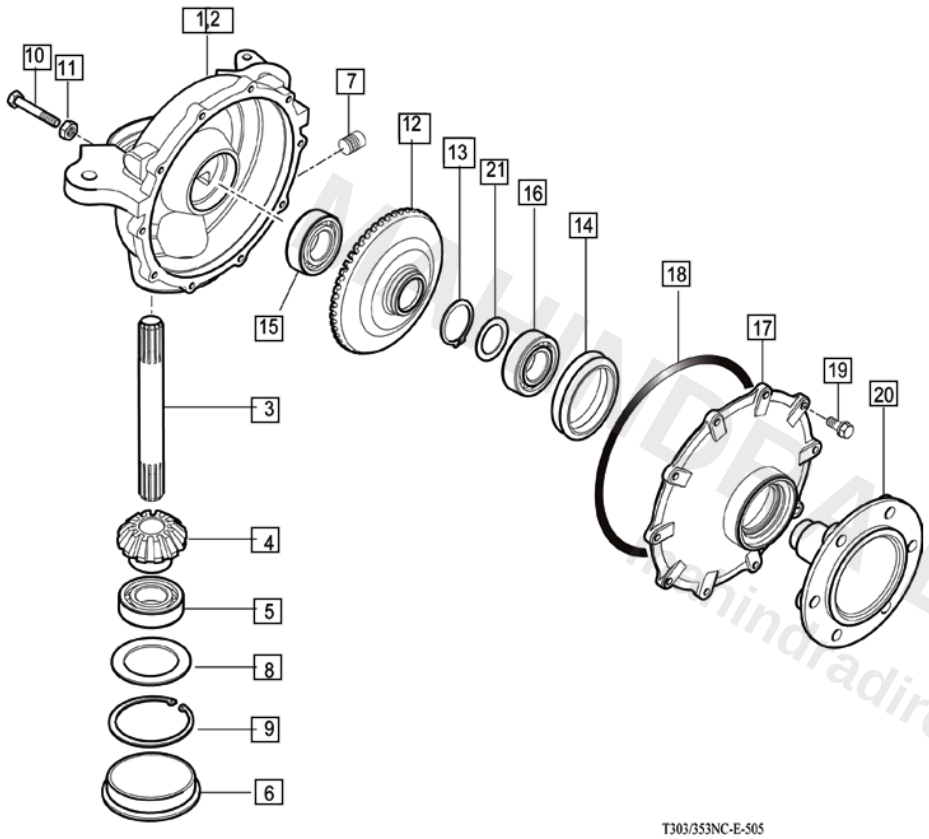

REF NO.	PART #	DESCRIPTION	PRICE	QTY NEEDED	SELECT QTY	ADD TO CART
010	V2014612030	BOLT, Hex	$5.52	2	2	ADD TO CART
011	V3042600120	NUT(For Plo...	$3.68	2	2	ADD TO CART
012	16704340080	BEVEL Gear...	$430.10	2	2	ADD TO CART
012	16704340081	GEAR BEVE...	$430.10	2	2	ADD TO CART
013	V7041400500	C-RING, Shaft	$8.99	2	2	ADD TO CART
013	17994420060	SNAP, Ring...	$8.99	2	2	ADD TO CART
014	16004340040	FRT Out Wh...	$75.90	2	2	ADD TO CART
015	V6041106208	BALL BEARI...	$75.90	2	2	ADD TO CART
016	V6001106210	BEARING, B...	$86.48	2	2	ADD TO CART

MAHINDRA DIRECT PARTS
www.mahindradirectparts.com

FRONT AXLE GEAR CASE 2

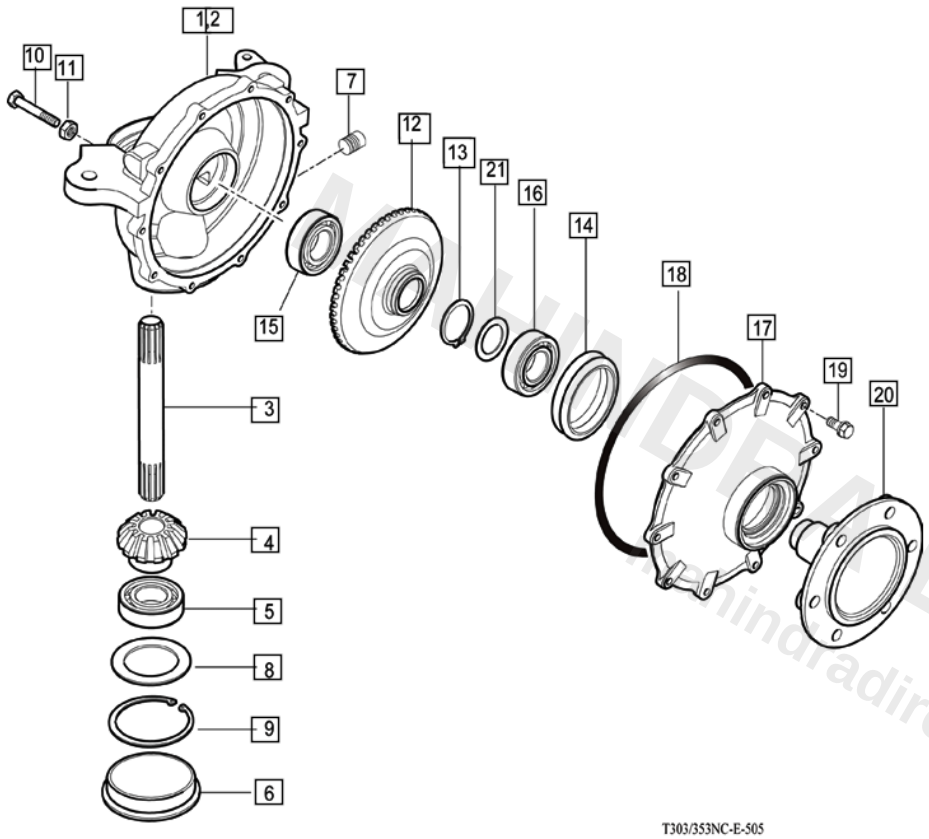

REF NO.	PART #	DESCRIPTION	PRICE	QTY NEEDED	SELECT QTY	ADD TO CART
017	16704340130M	COVER, Wh...	$230.46	2	2	ADD TO CART
018	16704340150	O-RING	$12.99	2	2	ADD TO CART
019	V2173608025	BOLT, Hex/S...	$4.14	20	20	ADD TO CART
020	16704340070	SHAFT, Wheel	$391.92	2	2	ADD TO CART
021	16709510080	WASHER, 5...	$10.99	2	2	ADD TO CART
*	16704002001F	AXLE ASSY...	—	1		NOT AVAILABLE
*	16704002002	AXLE ASSY...	—	1		NOT AVAILABLE
*	16704309201A	CASE ASSY,...	—	1		NOT AVAILABLE
*	16704309202	CASE ASSY...	—	1		NOT AVAILABLE

MAHINDRA DIRECT PARTS
www.mahindradirectparts.com